INSTALLATION, OPERATING AND SERVICING INSTRUCTION MANUAL

B+S Black & Verro European Combination Series

Boiling Top (BT)	Combination Oven Series (OV)
Char Broiler (CBR)	Griddle Hot Plate (GRP)
Char Grill (CGR)	Target Top (TT)

Approval Number: GMK10686

B+S Commercial Kitchens Pty Ltd
57 Plateau Road Reservoir VIC 3073 AUSTRALIA
Tel: +61 3 9469 4754 **Fax:** +61 3 94694504 **Web:** www.bscommercialkitchens.com

Please ensure this booklet is kept in a safe and prominent location for future reference.

Table of Contents

Introduction

We are confident that you will be delighted with your B&S product, and that it will become the backbone of your kitchen. To ensure you receive the utmost benefit from your new B&S appliance, there are two important things you can do.

1. Ensure you read this booklet thoroughly and carefully follow the instructions given. Please also ensure that this booklet is kept in a safe and prominent location for future reference.

2. Should you be unsure of any aspect of the operation/performance, servicing and installation of the appliance, please contact your B&S dealer immediately. In most instances, a phone call could answer your question.

Boiling Top Series

The B+S Black and Verro series Boiling Top incorporates a solid stainless steel frame that is built to last. A highly efficient and powerful black enameled Italian 31MJ single-ring burner readily meets the requirements of a demanding kitchen. Each burner is fitted with a multi-setting gas valve, enabling enhanced flame regulation.

The Boiling Top series can be combined with our Griddle Hot Plate series, Char Broiler series, Char Grill series, Target Top series and Oven series.

Oven Series

The B+S Black and Verro series Oven range has been designed to meet varied demands of commercial kitchens and restaurants. These commercial ovens have been built to last and are constructed using quality materials on a heavy duty stainless steel frame. These units are fitted with a performance-driven German made thermostat, always ensuring temperature accuracy while cooking. They are also equipped with a 29MJ U-shape burner that combines with a natural convection process to create an even distribution of heat throughout the oven's chamber, so you can produce accurate results every time. A multi-setting gas valve enables enhanced regulation of flame setting.

The Oven series can be combined with our Boiling Top series, Griddle Hot Plate series, Char Broiler series and Target Top series. (Char Grill series is **NOT** available with the Oven series)

Griddle Hot Plate Series

The B+S Black and Verro series Griddle Hot Plate incorporates a solid stainless steel frame that is built to last. It features a heavy duty top welded seamless grill plate available in four different sizes. It is heated by 22MJ aluminised tubular burners, allowing for even heat dispersion. Each burner is fitted with a flame failure safety device, piezo ignition and a multi-setting gas valve which enables enhanced regulation of flame setting.

The Griddle Hot Plate series can be combined with our Boiling Top series, Char Broiler series, Char Grill series and Oven series.

Char Broiler Series

The B+S Black and Verro series Char Broiler incorporates a solid stainless steel frame that is built to last. The cooking surface consists of heavy duty cast iron reversable grates with special drainage channels which direct fat to the spillage tray located at the front of the unit. A cast iron hood placed above the 33MJ stainless steel u-burners radiates heat evenly across the grates, creating an ideal surface for grilling. Each burner is fitted with a flame failure safety device, piezo ignition and a multi-setting gas valve which enables enhanced regulation of flame setting.

The Char Broiler series can be combined with our Boiling Top series, Griddle Hot Plate series and Oven series.

Char Grill Series

The B+S Black and Verro series Char Grill incorporates a solid stainless steel frame that is built to last. The cooking surface consists of heavy duty cast iron reversable grates with special drainage channels which direct fat to the spillage tray located at the front of the unit. Heavy duty 25.6MJ cast iron burners heat up volcanic rocks that are placed on top of heavy duty cast iron rock holders which then in turn radiates heat evenly across the grates, creating an ideal surface for grilling with a unique flavor. Each burner is fitted with a flame failure safety device, piezo ignition and a multi-setting gas valve which enables enhanced regulation of flame setting.

The Char Grill series can be combined with our Boiling Top series and Griddle Hot Plate series.

Target Top Series

The B+S Black and Verro series Target Top incorporates a solid stainless steel frame that is built to last. A commercial heavy duty, gas fired Target Top is a high output unit that consists of a 40MJ double-ring cast iron burner that offers accurate temperature control and infinitely variable radiating heat out from the center of a heavy duty mild steel sectional plate. The singular double-ring cast iron burner is surrounded by thermal insulating fire bricks, is located centrally beneath a removable heavy duty sectional plate and disperses the heat evenly throughout each section of the sectional plate. The unit is fitted with a flame failure safety device, piezo ignition and a multi-setting gas valve which enables enhanced regulation of flame setting.

The Target Top series can be combined with our Boiling Top series and Oven series.

Product Specifications

Appliance Description	Combination Series Boiling Top (BT), Griddle Hot Plate (GRP), Char Broiler (CBR), Char Grill (CGR), Target Top (TT) and Oven Range (OV)
Manufacturer	B+S Commercial Kitchens Pty Ltd
Address	57 Plateau Road, Reservoir VIC 3073
Telephone	+61 (03) 9469 4754
Fax	+61 (03) 9469 4504
Web	www.bscommercialkitchens.com
E-Mail	info@bscommercialkitchens.com
Warranty service	www.bscommercialkitchens.com/request-a-warranty-service-call
Brand names marketed under	B+S Black & Verro
Model number options	How to interpret model numbers: V - OV - SBX Z - CCCY - CCCY - CCCY - FF - CBM - BM - LS - C - P - CL - **V** - Brand Series = Verro Range - **OV** - Unit Code = Oven - **SB -** Unit Code = Boiling Top Burners - **X -** Number of Burners = 2, 4, 6 or 8 - **Z -** Type of BT Burner = E or G Burner - **CCC** - Combination = GRP, CBR, CGR or TT - **Y** - Size of Combination = 3, 6, 9 (300mm, 600mm or 900mm) - **FF -** Oven Option = Fan Forced - **CBM** - Cabinet Base Mounted - **BM** - Bench Mounted - **LS -** Leg Stand - **C -** Castors - **P** - Plinth Mounted - **CL** - Cantilever Examples: **BT-SB2E-CBR3-GRP3-LS** Is a B+S Black series combination two burner boiling top section using E burners, 300mm Char Broiler section and a 300mm Griddle Hot Plate section on legs stand. **VBT-SB2E-TT-9-CBM** Is a Verro series combination two burner boiling top section using E burners, 900mm Target Top section cabinet mounted. **VOV-SB2E-CBR3-GRP6-FF** Is a Verro series oven with a two burner boiling top section using E burners, 300mm Char Broiler section and a 600mm Griddle Hot Plate section. The oven has a Fan Forced option.
IAPMO Approval Number	GMK10686
Date of Certification	26/06/2020
Australian Standards	AS/NZS5601 (Refer to latest version)
Gas Types:	Natural Gas and Propane

Nominal Input Rates

Table 1: Boiling Top Series (BT)

Burner	Gas Type	Burner Injector Size (mm)	Pilot Injector Size (mm)	Input Rate (MJ/h)	Supply Pressure (kPa)
E-Burner	Natural Gas	2.50	0.41	31	1.00
E-Burner	Propane	1.35	0.25	25	2.60
G-Burner	Natural Gas	2.70	0.45	34	1.00
G-Burner	Propane	1.60	0.25	34	2.60
C-Burner	Natural Gas	1.70	0.45	16	1.00
C-Burner	Propane	1.05	0.25	15	2.60

Table 2: 600mm Oven Series (OV)

Gas Type	Burner Injector Size (mm)	Pilot Injector Size (mm)	Input Rate (MJ/h)	Supply Pressure (kPa)
Natural Gas	2.50	0.41	29	1.00
Propane	1.45	0.30	28	2.60

Table 3: 900mm Oven Series (OV)

Gas Type	Burner Injector Size (mm)	Pilot Injector Size (mm)	Input Rate (MJ/h)	Supply Pressure (kPa)
Natural Gas	2.50	0.41	29	1.00
Propane	1.45	0.30	28	2.60

Table 4: Griddle Hot Plate Series (GRP)

Gas Type	Burner Injector Size (mm)	Pilot Injector Size (mm)	Input Rate (MJ/h)	Supply Pressure (kPa)
Natural Gas	2.00	0.41	22	1.00
Propane	1.30	0.20	22	2.60

Table 5: Char Broiler Series (CBR)

Gas Type	Burner Injector Size (mm)	Pilot Injector Size (mm)	Input Rate (MJ/h)	Supply Pressure (kPa)
Natural Gas	2.65	0.41	34	1.00
Propane	1.55	0.30	30	2.60

Table 6: Char Grill Series (CGR)

Gas Type	Burner Injector Size (mm)	Pilot Injector Size (mm)	Input Rate (MJ/h)	Supply Pressure (kPa)
Natural Gas	2.45	0.41	25.6	1.00
Propane	1.50	0.25	28.6	2.55

Table 7: Target Top Series (TT)

Gas Type	Burner Injector Size (mm)	Pilot Injector Size (mm)	Input Rate (MJ/h)	Supply Pressure (kPa)
Natural Gas	1.70 (SM) 2.60 (LRG)	0.51	42	1.00
Propane	1.10 (SM) 1.50 (LRG)	0.25	42	2.60

Gas Pressure

Most network mains that supply natural gas to a commercial property or an LPG-Propane cylinder provide a minimum pressure of between 1.13kPa and 2.75kPa respectively, but gas mains with higher pressure may be available in some areas.

Gas pressure must be checked at the test point of each unit by an authorised installer and when **ALL** equipment on the same line is turned on the **HIGH** setting.

Dimensions

All listed values in Table 8 below are the minimum values allowable for each unit size.

Table 8: Overall Dimensions

Unit Size (mm)	Weight (kg)	Overall Height (mm)	Overall Height (Bench Mounted) (mm)	Overall Depth (mm)	Overall Width (mm)
300	100	930	425	840	300
600	200	930	425	840	600
900	300	930	425	840	900
1200	400	930	425	840	1200

Connections

300mm Unit Connection

Connections listed below are to be followed according to Table 9 and 10. The values are the same for all B+S Black & Verro series BT, GRP, CBR and CGR 300mm wide units.

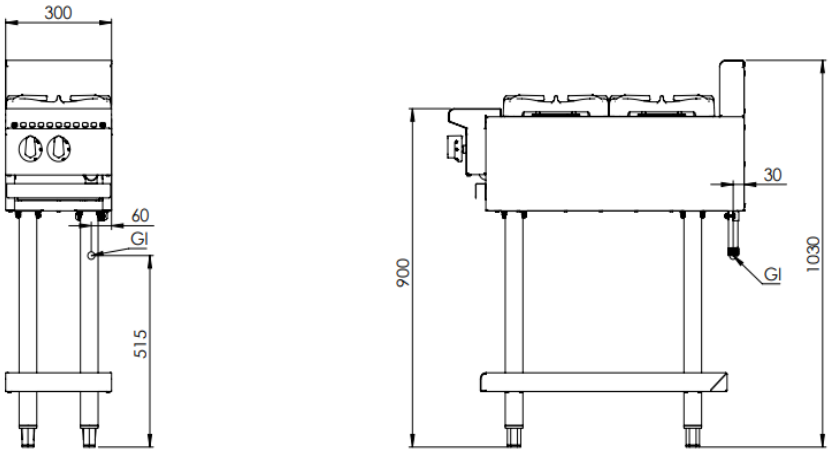

Figure 1: 300mm Unit Connection

Table 9: 300mm Leg Stand & Cabinet Connection Values

Connection	Fitting (BSP)	Height from Floor (mm)	Position from Rear of Appliance (mm)	Position from LH/RH of Appliance (mm)
Gas Inlet (GI)	3/4" (M)	515 (+/- 5)	30 (+/- 5)	60 (+/- 5)

Table 10: 300mm Bench Mounted Connection Values

Connection	Fitting (BSP)	Height from Floor (mm)	Position from Rear of Appliance (mm)	Position from LH/RH of Appliance (mm)
Gas Inlet (GI)	3/4" (M)	125 (+/- 5)	50 (+/- 5)	60 (+/- 5)

600mm Unit Connection Without Oven

Connections listed below are to be followed according to Table 11 and 12. The values are the same for all B+S Black & Verro series BT, GRP, CBR and CGR 600mm wide units **without** an oven.

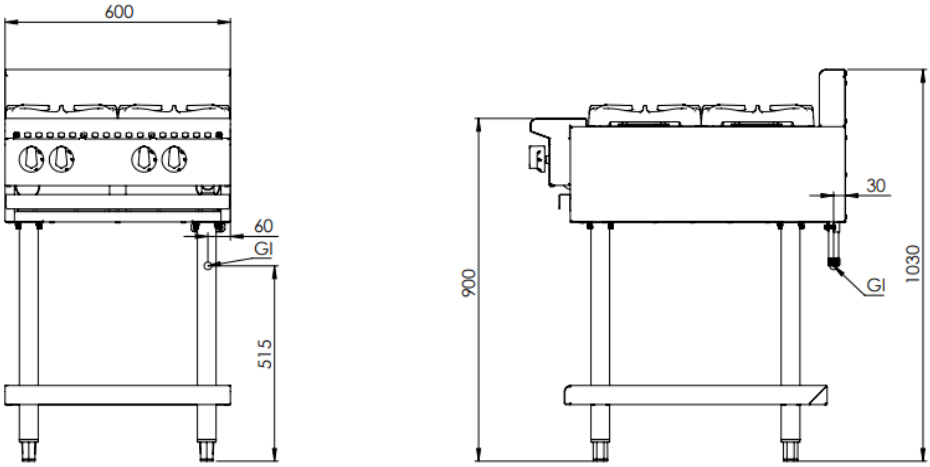

Figure 2: 600mm Unit Connection Without Oven

Table 11: 600mm Leg Stand & Cabinet Connection Values

Connection	Fitting (BSP)	Height from Floor (mm)	Position from Rear of Appliance (mm)	Position from LH/RH of Appliance (mm)
Gas Inlet (GI)	3/4" (M)	515 (+/- 5)	30 (+/- 5)	60 (+/- 5)

Table 12: 600mm Bench Mounted Connection Values

Connection	Fitting (BSP)	Height from Floor (mm)	Position from Rear of Appliance (mm)	Position from LH/RH of Appliance (mm)
Gas Inlet (GI)	3/4" (M)	125 (+/- 5)	50 (+/- 5)	60 (+/- 5)

600mm Unit Connection with Oven

Connections listed below are to be followed according to Table 13. The values are the same for all B+S Black & Verro series Oven combinations with BT, GRP and CBR 600mm wide.

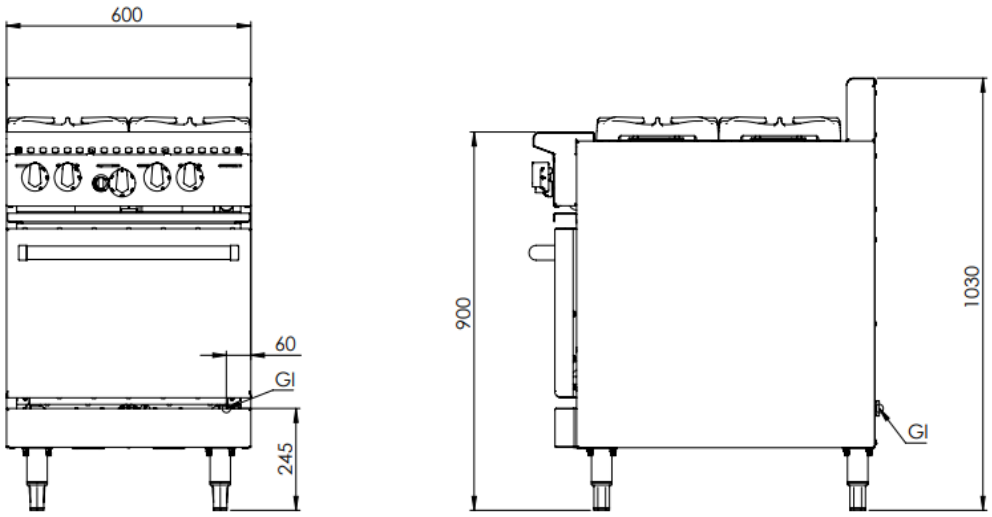

Figure 3: 600mm Unit Connection with Oven Combinations

Table 13: 600mm Unit with Oven Connection Values

Connection	Fitting (BSP)	Height from Floor (mm)	Position from Rear of Appliance (mm)	Position from LH/RH of Appliance (mm)
Gas Inlet (GI)	3/4" (F)	245 (+/- 5)	5 (+/- 5)	60 (+/- 5)

900mm Unit Connection without Oven

Connections listed below are to be followed according to Table 14 and 15. The values are the same for all B+S Black & Verro series BT, GRP, CBR and CGR 900mm wide units **without** an oven.

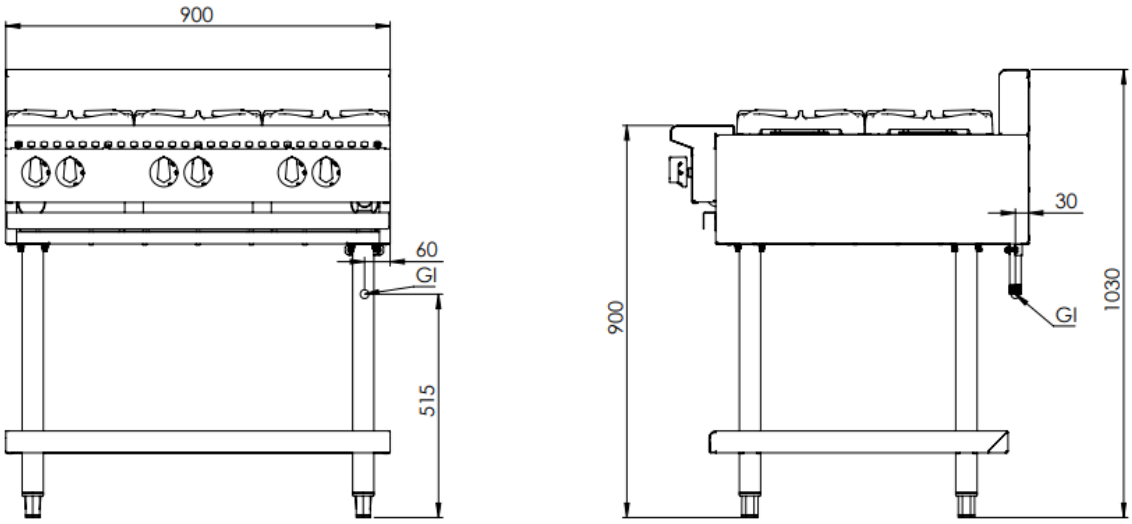

Figure 4: 900mm Unit Connection Without Oven

Table 14: 900mm Leg Stand & Cabinet Connection Values

Connection	Fitting (BSP)	Height from Floor (mm)	Position from Rear of Appliance (mm)	Position from LH/RH of Appliance (mm)
Gas Inlet (GI)	3/4" (M)	515 (+/- 5)	30 (+/- 5)	60 (+/- 5)

Table 15: 900mm Bench Mounted Connection Values

Connection	Fitting (BSP)	Height from Floor (mm)	Position from Rear of Appliance (mm)	Position from LH/RH of Appliance (mm)
Gas Inlet (GI)	3/4" (M)	125 (+/- 5)	50 (+/- 5)	60 (+/- 5)

900mm Unit Connection with Oven

Connections listed below are to be followed according to Table 16. The values are the same for all B+S Black & Verro series Oven combinations with BT, GRP and CBR 900mm wide.

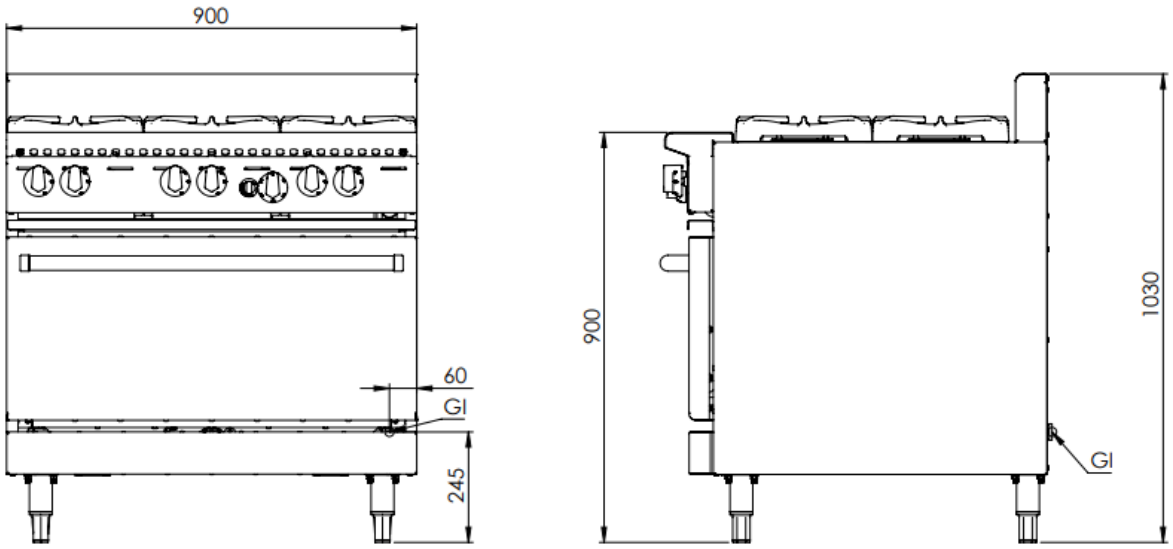

Figure 5: 900mm Unit Connection with Oven Combinations

Table 16: 900mm Unit with Oven Connection Values

Connection	Fitting (BSP)	Height from Floor (mm)	Position from Rear of Appliance (mm)	Position from LH/RH of Appliance (mm)
Gas Inlet (GI)	3/4" (F)	245 (+/- 5)	5 (+/- 5)	60 (+/- 5)

1200mm Unit Connection without Oven

Connections listed below are to be followed according to Table 17 and 18. The values are the same for all B+S Black & Verro series BT, GRP, CBR, CGR and TT 1200mm wide units **without** an oven.

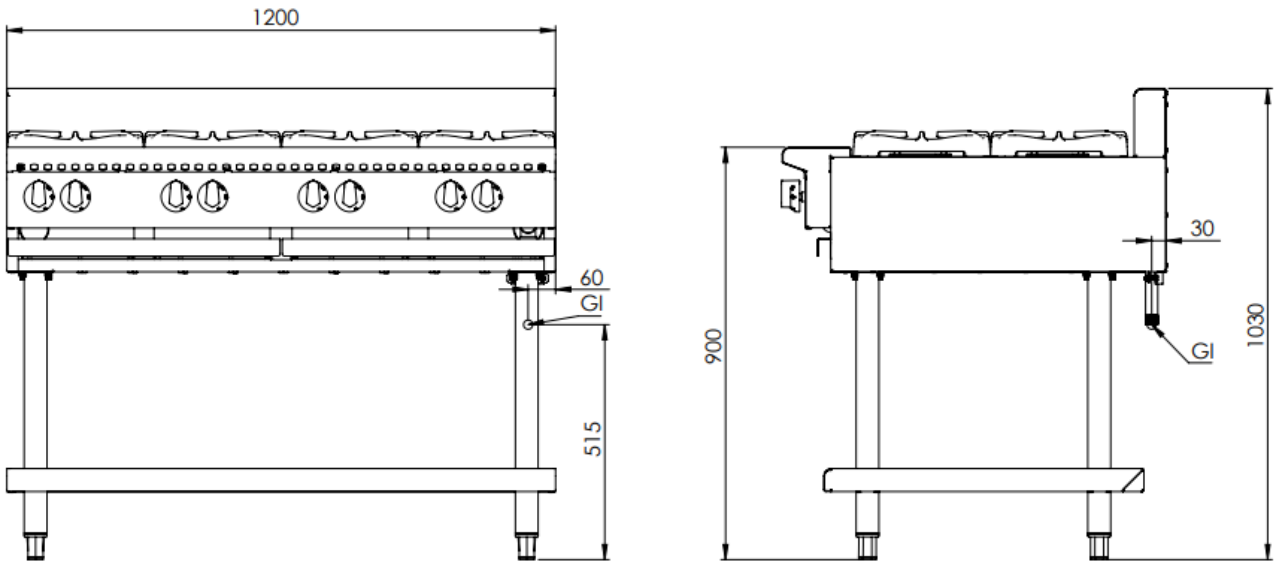

Figure 6: 1200mm Unit Connection Without Oven

Table 17: 1200mm Leg Stand & Cabinet Connection Values

Connection	Fitting (BSP)	Height from Floor (mm)	Position from Rear of Appliance (mm)	Position from LH/RH of Appliance (mm)
Gas Inlet (GI)	3/4” (M)	515 (+/- 5)	30 (+/- 5)	60 (+/- 5)

Table 18: 1200mm Bench Mounted Connection Values

Connection	Fitting (BSP)	Height from Floor (mm)	Position from Rear of Appliance (mm)	Position from LH/RH of Appliance (mm)
Gas Inlet (GI)	3/4” (M)	125 (+/- 5)	50 (+/- 5)	60 (+/- 5)

1200mm Unit Connection with Oven

Connections listed below are to be followed according to Table 19. The values are the same for all B+S Black & Verro series Oven combinations with BT, GRP, CBR and TT 1200mm wide.

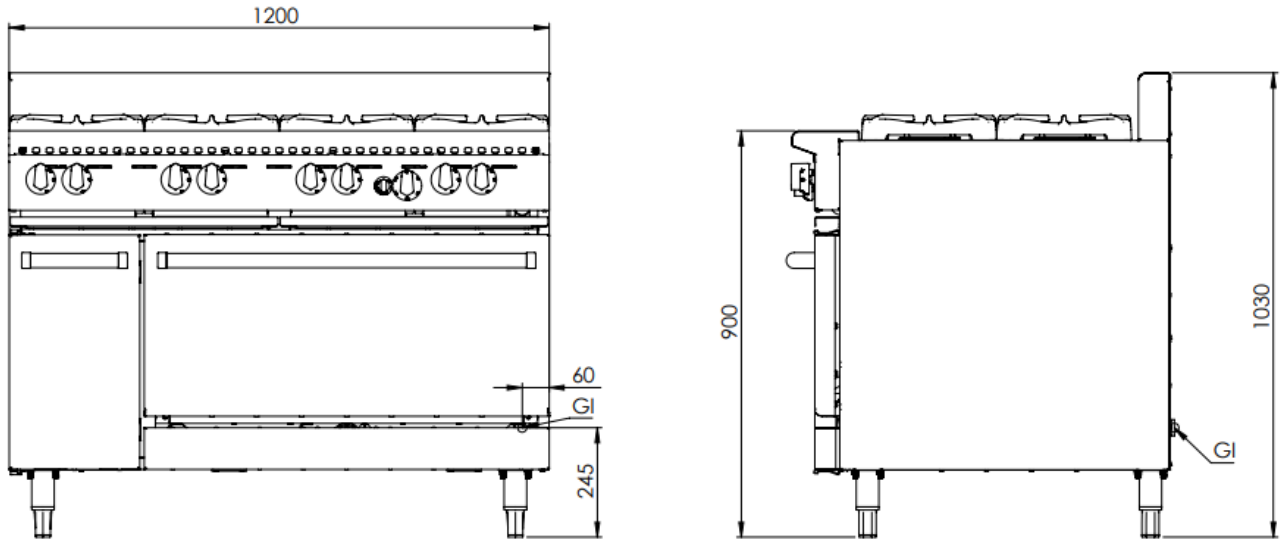

Figure 7: 1200mm Unit Connection with Oven Combinations

Table 19: 1200mm Unit with Oven Connection Values

Connection	Fitting (BSP)	Height from Floor (mm)	Position from Rear of Appliance (mm)	Position from LH/RH of Appliance (mm)
Gas Inlet (GI)	3/4” (F)	245 (+/- 5)	5 (+/- 5)	60 (+/- 5)

Important Warning Information

THIS APPLIANCE SHALL ONLY BE INSTALLED/SERVICED BY AN AUTHORISED INSTALLER.

THIS APPLIANCE MUST BE INSTALLED IN ACCORDANCE WITH THE SPECIFIED INSTRUCTIONS AND SPECIFICATIONS.

IMPROPER INSTALLATION OR OPERATION OF THIS APPLIANCE MAY RESULT IN PRODUCT FAILURE WHICH MAY LEAD TO PROPERTY DAMAGE, PERSONAL INJURY OR DEATH.

CAUTION MUST BE TAKEN WHEN OPERATING THIS APPLIANCE TO MINIMISE RISK OF FIRE. THE APPLIANCE MUST NOT BE LEFT ON OR UNATTENDED.

REGULAR INSPECTIONS BY AN AUTHORISED SERVICE PERSON ARE STRONGLY RECOMMENDED TO ENSURE PROPER AND SAFE FUNCTIONING OF THIS APPLIANCE.

AFTER ANY SERVICING OR ADJUSTING OF GAS CONNECTED COMPONENTRY, A GAS LEAK TEST MUST BE CARRIED OUT TO ENSURE THERE ARE NO GAS LEAKING HAZARDS.

NEVER STORE ANY FLAMMABLE LIQUIDS/VAPOURS IN THE VICINITY OF THIS APPLIANCE. NEVER SPRAY AEROSOLS IN THE VICINITY OF THIS APPLIANCE WHILE IT IS IN OPERATION.

ENSURE ANY TRANSIENT PROTECTION IS REMOVED BEFORE INSTALLING THE APPLIANCE. ENSURE ANY POSSIBLE DAMAGE TO THE APPLIANCE OR COMPONENTS/PARTS THAT MAY HAVE BEEN SUSTAINED DURING TRANSPORTATION IS REPORTED TO THE MANUFACTURER ASAP.

THIS APPLIANCE IS NOT INTENDED TO BE USED IN A MARINE ENVIRONMENT.

ENSURE APPLIANCE IS INSTALLED IN A STABLE POSITION.

FAILURE TO FOLLOW THE INFORMATION PROVIDED IN THIS BOOKLET WILL VOID THE B&S WARRANTY AND MAY RESULT IN DAMAGE TO EQUIPMENT OR INJURY TO PERSONNEL

Obligation of Gasfitters

Please note that checking and adjusting burner pressures on commercial catering appliances is an obligation of gasfitters.

The relevant legislation is as follows from the **Plumbing Regulations 2018** administered by the **Victorian Building Authority**:

Division 3 – Gasfitting work

19. What is Gasfitting work?

Gasfitting work is the construction, installation, replacement, repair, alteration, maintenance, testing or **commissioning** of any pipe, **appliance**, flue, fitting, apparatus, control or other item that is involved with the supply or use of gas and that is fitted downstream of the gas supply point.

As per **AS/NZS5601 (refer to current version)**, clause 6.11.1, General, Commissioning requirements apply to both new and existing gas installations. Commissioning of existing gas installations is required after making modifications or undertaking servicing or repair activities.

As per **AS/NZS5601 (refer to current version)**, clause 6.11.2, Australian Requirements, this gas appliance must be commissioned by the authorized person who –

(a) Installs the appliance when gas is available at the time of installation; or
(b) Makes gas available to the appliance if gas was not available at the time of installation.

As per **AS/NZS5601 (refer to current version)**, clause 6.11.3, New Zealand Requirements, Every Part of a gas installation shall be subject to commissioning prior to initial use. If the gas supply to the installation is insufficient or otherwise unsuitable, the installer shall notify the gas supplier and leave the installation or appliance(s) disconnected.

As per **AS/NZS5601 (refer to current version)**, clause 6.11.4, Commissioning of appliances, Commissioning of appliances shall only be performed after the installation of all equipment that may impact appliance operation (e.g. air movement and extraction systems). Commissioning of appliances shall take full account of the manufacturer's instructions and all aspects of the gas installation that may impact appliance operation. Commissioning of appliances shall include but not be limited to the following:

a) Testing and purging of the appliance and gas installation.

b) Checks to ensure the appliance is in safe working order.

c) Ignition of each burner of the appliance and, where necessary, adjustment in accordance with the manufacturer's instructions.

d) Checking for flame abnormality in accordance with manufacturer's instructions.

e) Operating the appliance at the maximum gas consumption to bring it to normal operating temperature.

f) Where applicable, testing for spillage of combustion products. For an open flued appliance, testing shall be performed in accordance with Appendix P.

g) Testing of any safety devices for correct operation.

h) Informing the consumer, when present, on the safe and correct operation of the appliance and any auxiliary equipment.

i) Handing of the appliance operating instructions to the consumer, or if the consumer is not present, leaving the instructions in a suitable location on the premises.

Installation Instructions

Regulations

This appliance **must** be installed in accordance with national installation codes and in addition, in accordance with relevant national codes covering gas and fire safety. Installations **must** be carried out by authorised persons only and in accordance with the manufacturer's installation instructions, local gas fitting regulations, municipal building codes, **AS/NZ 5601 (refer to current version)** – Gas Installations and any other health and safety regulations, local authority, gas, electrical any other statutory regulations.

Data Label

The data label is located on the front of the appliance or located behind the door of the appliance if one is present. This appliance is suitable for Natural Gas and LPG. Please ensure that the gas supply matches what is written on the data label. Ensure that there is adequate supply pressure and volume available – refer to the appliance to for the following information:

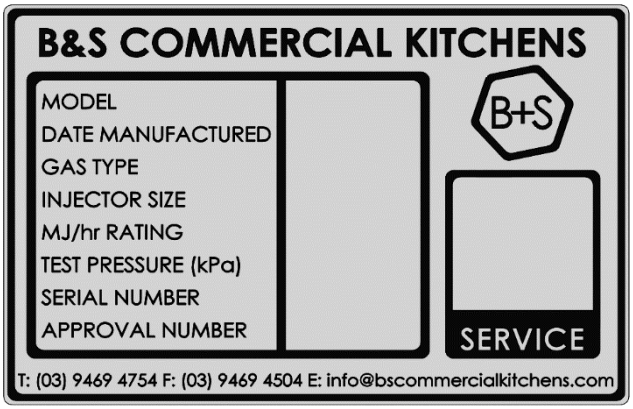

Figure 8: B&S Data Label

In the event that the data label is missing or unreadable, refer to the manufacturer's servicing and installation manual or contact your B+S dealer for a replacement.

Ventilation

The appliance **must** always be installed under an extraction hood. Ventilation **must** be in accordance with **AS/NZS 5601 (refer to current version) - Gas Installations**. The appliance **must** have adequate ventilation means, to prevent dangerous buildup of combustion gases. **Never** connect a ventilation system to the appliance flue outlet or block it by any means.

The appliance shall be installed with an exhaust system comprising of a hood and duct system. The hood shall be made of a material which is impervious to fat, grease and vapour. It shall be constructed so that it can be readily and efficiently cleaned. Its internal structural faces shall be smooth and free of obstructions and all joints shall be grease tight.

The hood shall be located such that it effectively ventilates the oven and shall extend at least 150mm beyond the perimeter of the oven. The exhaust duct system shall be adequately sized and shall not get connected to any other ventilating or exhaust system.

A suitable grease trap shall be provided to prevent grease vapour entering the exhaust system and shall be located in a position that will avoid constituting a fire hazard and be readily accessible for regular cleaning.

Unless adequately protected, a hood and a duct shall be fitted at least 450mm from any combustible material and so that the lower edge of the grease filter is no less than 1.35 meters above the cooking surface. (Please refer to **AS/NZS 5601 (refer to current version) clause 6.10.2.2** to verify clearances for ventilation.)

B&S units can be installed in a domestic environment provided the installation is strictly in accordance with the manufacturer's instructions and as per the **AS/NZS5601 (Refer to current version).**

The installation of the unit must comply with **clauses 6.2.4, 6.10.2 and 6.10.1.15** and an exhaust system shall be installed according to **AS1668.1 and AS1668.2** interlocked to the gas supply.

B+S shall not be responsible for any unauthorized and/or non-compliant installations and will void the warranty.

Combustible Surfaces

Clearances to combustible surfaces must be in accordance with **AS/NZS 5601/AG 601 (Refer to current version) - Gas Installations, clause 5.12.4.5.** The appliance **must** be installed on a flat/level floor. In the occurrence that the floor is not fire resistant, a fire resistant material shall be put under the appliance which shall have a fire resistance rating of at least equal to if not greater than 10mm thick millboard. The material **must** extend a minimum of 50mm beyond the edge of the appliance.

No combustible materials shall be located within 150mm of the appliance.

An appliance fitted with a plinth mounted option will have its legs removed and a concrete slab of minimum 100mm thickness is to be used. The plinth depth must be no greater than 700mm.

Please refer to table 6.9 and 6.10 in AS 5601 (refer to current version) clause 6.10.2.2 and 6.10.2.3. Table 6.10.2.3 is provided below:

Minimum Clearances around cooking surface area

The clearance to combustible surfaces from commercial catering equipment shall be as specified in the appliance manufacturer's instructions and shall not be less than the clearance specified in the table below:

Cooking Surface Area		Minimum clearance (mm)
(A)	Above the cooking surface of a gas appliance.	600
(B)	Subject to (C) below, from a cooking surface area having an open flame cooking appliance and no means of preventing cooking vessels from overhanging the edge of the gas appliance.	250
(C)	From the side of an open flame cooking appliance where the combustible surface is at least 100mm below a cooking surface area.	50
(D)	From a gas appliance flueway or rear of the gas appliance with a splashback	50
(E)	From the rear or side of a gas appliance which is not an open flame gas cooking appliance.	50

NOTE 1

The cooking surface area is defined as being that part of the gas appliance where cooking normally takes place and does not include those parts of the gas appliance containing control knobs.

NOTE 2

These clearances do not apply where an adjacent surface is of a non-combustible material or is combustible but protected with a fire-resistant material. The fire-resistant material may be covered by ceramic tiles or stainless steel to meet appropriate requirements relating to health protection.

NOTE 3

Care should be taken where a combustible surface is covered by a non-combustible material for example, covering a combustible surface with stainless steel will not prevent heat transfer, and in some circumstances hazardous situation could arise.

Gas Connection

All gas connections must only be carried out by a qualified person.

The gas connection for all combinations listed **without** an oven is 3/4" BSP Male.

The gas connection for all combinations listed **with** an oven is 3/4" BSP Female.

This appliance is available in models for fixed installation or in models fitted with lockable wheels/castors.

The appliance can be connected with a rigid pipe as specified in **AS/NZS 5601 (refer to current version)**. For fixed installation models, we recommend connection with 20mm copper tube and an Australian approved isolating ball valve.

For models fitted with lockable wheels/castors an Australian approved stainless steel braided flexible hose of adequate internal diameter must be used and approved under **AS/NZS 1869 (refer to current version)** and be of class B or D. The fitting of the hose must comply with the relevant sections of gas installation code **AS/NZS 5601 (refer to current version)**. A restraining chain or wire must be fitted. We recommend a maximum length of 1.50 meters for the flexible hose. When the appliance is in position, all of the wheels/castors must have its built in lock engaged to prevent any movement of the appliance. An Australian approved isolating ball valve must also be fitted.

WARNING

Before connecting new piping to this appliance, the pipe must be blown out thoroughly to remove all foreign material. Foreign material in the burner and gas controls will cause improper and dangerous operation.

Pressure Test Point

All appliances that are dispatched from our factory will have a gas pressure regulator provided. The gas pressure regulator will have been tested and adjusted according to the specifications for the required gas type. The regulator may require another adjustment to achieve the required gas pressure when the appliance is installed. This may only be carried out by a qualified person.

The gas pressure regulator is to be installed as close to the appliance as possible. Gas pressure must be checked at the test point of each unit by an authorised installer and when **ALL** equipment on the same line is turned on the **HIGH** setting. The test point pressure should be adjusted to what is shown on the appliances data label provided and the specification nominal input rates given in this manual.

Commissioning

Before commissioning the unit, we advise checking **all** connections for gas leaks with soapy water.

Do not use a naked flame for detecting leaks.

Check the following functions in accordance with the operating instructions specified below to the corresponding unit that is being installed. Lighting of all pilots and burners, 'HIGH' flame settings, 'LOW' flame settings and 'OFF' position.

Before leaving the new installation and operation of the appliance is satisfactory, ensure the operator has been instructed in areas of correct lighting, operation and shutdown procedure for the appliance.

NOTE

If for some reason it is not possible to get the appliance to operate correctly, shut off the gas supply and contact your B+S dealer.

Boiling Top Series (BT)

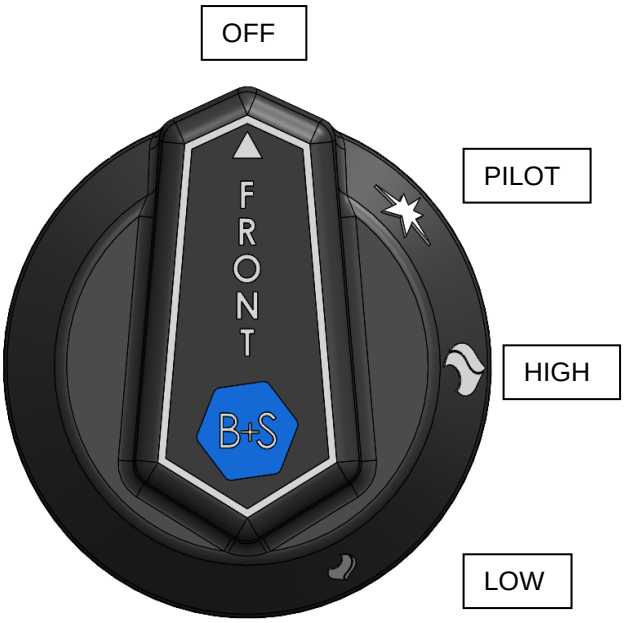

Figure 9: B&S Control Knob with Pilot

If the appliance is fitted <u>WITH</u> a pilot and/or flame failure

(A) Ensure gas control is in the **'OFF'** position.

(B) Depress the operating knob of the relevant burner and turn anti-clockwise to the **'PILOT'** position and light pilot manually. Hold this position for approximately 20 seconds or until the pilot remains alight when you release the operating knob.

(C) Observe that the pilot light is established. Pilot flame should be between 10-20mm in size and be in direct contact with thermocouple (where fitted). Should the thermocouple require adjustment, lift off trivet and spillage bowl to gain access to the nut holding thermocouple on pilot assembly. After adjusting reassemble in reverse order.

(D) If the pilot light does not light, turn control knob to **'OFF'** position, wait five minutes and repeat steps **A** to **C**.

<u>NOTE</u>

If the pilot flame is smaller than the parameters described in part **(C)**, examine the pilot gas line (6mm stainless steel flexible tube) for any possible blockages/crimps in the line. To gain access to gas control components, remove control knobs and undo screws located on either underside of the control panel. Once examined, place the control panel back onto the unit and fix with the same screws.

(E) Once the pilot is established turn the control knob anti-clockwise to the **'HIGH'** position. Examine flame.

(F) Turn control knob anti-clockwise to the **'LOW'** position. Examine flame.

(G) Turn control knob clockwise to the **'OFF'** position.

Repeat steps **A** to **G** for all burners.

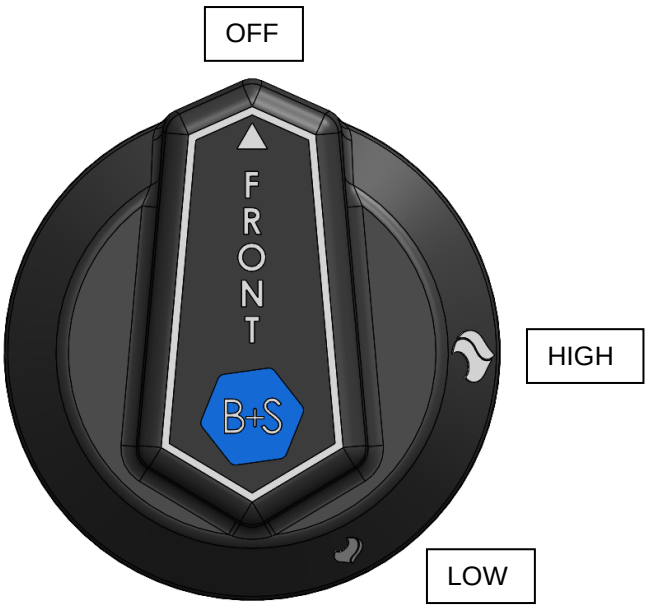

Figure 10: B&S Control Knob without Pilot

If the appliance is <u>NOT</u> fitted with a pilot and/or flame failure

(A) Ensure gas control is in the **'OFF'** position.

(B) Depress operating knob of relevant burner and turn anti-clockwise 180º to the **'LOW'** position and light burner manually. Examine flame.

(C) Turn control knob clockwise to the **'HIGH'** position. Examine flame.

(D) Turn control knob clockwise to the **'OFF'** position.

Repeat steps **A** to **D** for all burners.

If the appliance is <u>NOT</u> fitted with a pilot but only flame failure.

(A) Ensure gas control is in the **'OFF'** position.

(B) Depress operating knob of relevant burner and turn anti-clockwise 180º to the **'LOW'** position and light burner manually. Examine flame.

(C) The flame should be long enough to be in direct contact with the thermocouple. Should the thermocouple require adjustment, lift off trivet and spillage bowl to gain access to the nut holding thermocouple on pilot assembly. After adjusting, reassemble in reverse order. Once the flame is established release the knob.

(D) Turn control knob clockwise to the **'HIGH'** position. Examine flame.

(E) Turn control knob clockwise to the **'OFF'** position.

Repeat steps **A** to **E** for all burners.

Char Broiler Series (CBR)

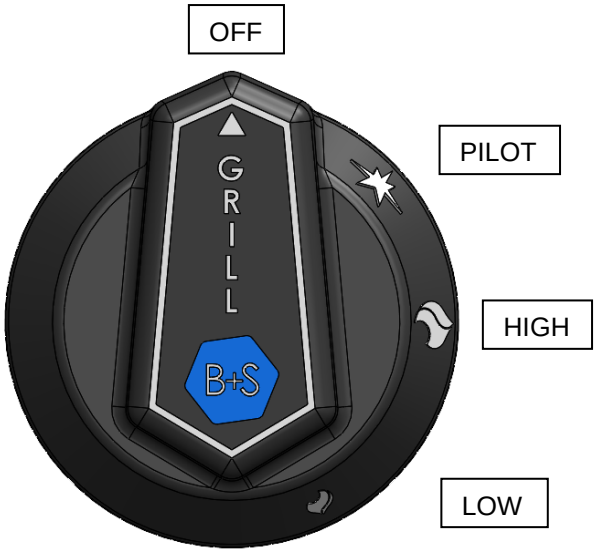

Figure 11: B&S Control Knob for Char Broiler

(A) Ensure gas control is in the **'OFF'** position.

(B) Depress the operating knob of the relevant burner and turn anti-clockwise to the **'PILOT'** position. Whilst keeping the knob pressed in, press the piezo ignition three to four times to ignite the pilot. Hold this position for approximately 20 seconds or until the pilot remains alight when you release the operating knob.

Should the piezo electrode not spark, ensure that the lead connected to the rear of the piezo is firmly fitted and inspect the lead throughout the appliance to the pilot to ensure that it is not earthing, or the ceramic of the electrode is cracked from overtightening.

(C) Once a pilot light is established, the pilot flame should be between 10-20mm in size and be in direct contact with thermocouple.

Should the thermocouple require adjustment, carefully lift off the cast iron char broiler grates and radiant hoods as well as removing the control knobs and undoing screws located on either underside of the control panel to have internal access of the appliance. Once front access is available the pilot assembly may be removed by unscrewing the two screws internally in the unit and the 4 screws holding the pilot bracket and adjusted accordingly. After adjusting, reassemble in reverse order.

(D) If the pilot light does not light or does not remain alight, turn the control knob to **'OFF'** position, wait five minutes and repeat steps **A** to **C**.

NOTE

If the pilot flame is smaller than the parameters described in part **(C)**, examine the pilot gas line (6mm stainless steel flexible tube) for any possible blockages/crimps in the line. To gain access to gas control components, remove control knobs and undo screws located on either underside of the control panel. Once examined, place the control panel back onto the unit and fix with the same screws.

(E) Once the pilot is established, turn the control knob anti-clockwise to the **'HIGH'** position. Examine flame.

Should the adjustment of the primary air intake into the burner be necessary, carefully lift off the cast iron char broiler grates and radiant hoods and unscrew both screws fixing the burner in place. The aeration shutter for NG is roughly 7.5mm-8mm open and LPG is 15mm-16mm open. The burner will always be factory set for the given gas type as it leaves the factory.

(F) Turn control knob anti-clockwise to the **'LOW'** position. Examine flame.

(G) Turn control knob clockwise to the **'OFF'** position.

Repeat steps **A** to **G** for all burners.

Char Grill Series (CGR)

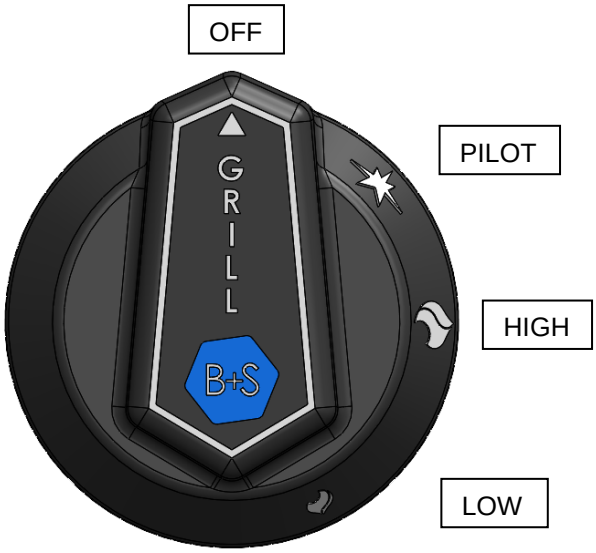

Figure 12: B&S Control Knob for Char Grill

(A) Ensure gas control is in the **'OFF'** position.

(B) Depress the operating knob of the relevant burner and turn anti-clockwise to the **'PILOT'** position. Whilst keeping the knob pressed in, press the piezo ignition three to four times to ignite the pilot. Hold this position for approximately 20 seconds or until the pilot remains alight when you release the operating knob.

Should the piezo electrode not spark, ensure that the lead connected to the rear of the piezo is firmly fitted and inspect the lead throughout the appliance to the pilot to ensure that it is not earthing, or the ceramic of the electrode is cracked from overtightening.

(C) Once a pilot light is established, the pilot flame should be between 10-20mm in size and be in direct contact with thermocouple.

Should the thermocouple require adjustment, carefully lift off the cast iron char grill grates, volcanic rocks and cast iron rock holder as well as removing the control knobs and undoing screws located on either underside of the control panel to have internal access of the appliance. Once front access is available the pilot assembly may be removed by unscrewing the two screws internally on the pilot cover and the pilot will drop adjusted accordingly. After adjusting, reassemble in reverse order.

(D) If the pilot light does not light or does not remain alight, turn the control knob to **'OFF'** position, wait five minutes and repeat steps **A** to **C**.

NOTE

If the pilot flame is smaller than the parameters described in part **(C)**, examine the pilot gas line (6mm stainless steel flexible tube) for any possible blockages/crimps in the line. To gain access to gas control components, remove control knobs and undo screws located on either underside of the control panel. Once examined, place the control panel back onto the unit and fix with the same screws.

(E) Once the pilot is established, turn the control knob anti-clockwise to the **'HIGH'** position. Examine flame.

Should the adjustment of the primary air intake into the burner be necessary, carefully lift off the cast iron char grill grates, volcanic rocks and cast iron rock holder to have access to the burner. The aeration shutter for NG is roughly half open and LPG is fully open. Allow the burner at minimum 10 min to heat up and for the flame to settle. The burner will always be factory set for the given gas type as it leaves the factory.

(F) Turn control knob anti-clockwise to the **'LOW'** position. Examine flame.

(G) Turn control knob clockwise to the **'OFF'** position.

Repeat steps **A** to **G** for all burners.

Griddle Hot Plate Series (GRP)

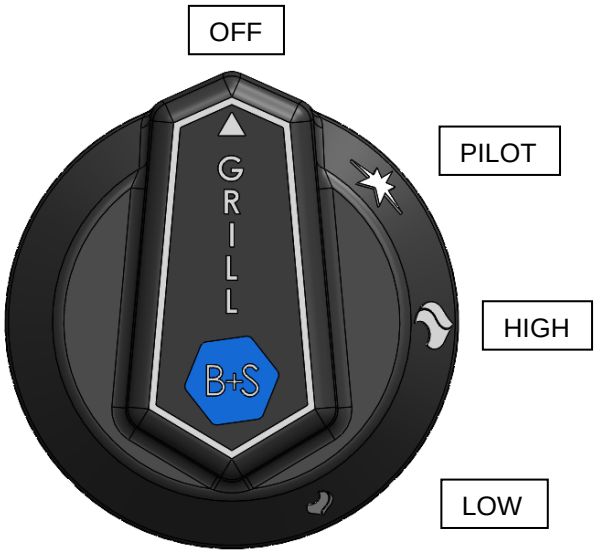

Figure 13: B&S Control Knob for Griddle Hot Plate

(A) Ensure gas control is in the **'OFF'** position.

(B) Depress the operating knob of the relevant burner and turn anti-clockwise to the **'PILOT'** position. Whilst keeping the knob pressed in, press the piezo ignition three to four times to ignite the pilot. Hold this position for approximately 20 seconds or until the pilot remains alight when you release the operating knob.

Should the piezo electrode not spark, ensure that the lead connected to the rear of the piezo is firmly fitted and inspect the lead throughout the appliance to the pilot to ensure that it is not earthing, or the ceramic of the electrode is cracked from overtightening.

(C) Once a pilot light is established, the pilot flame should be between 10-20mm in size and be in direct contact with thermocouple.

Should the thermocouple require adjustment, carefully lift off the grill plate and internal heat reflector as well as removing the control knobs and undoing screws located on either underside of the control panel to have internal access of the appliance.

NOTE

300mm Grill Plate can be removed by a single patron. 600mm-1200mm MUST have at minimum 2 patrons to assist lifting the plate.

Once top and front access is available the pilot assembly may be accessed through the top of the unit without having to remove the pilot bracket. If removing the grill plate is not allowable, you can access the pilot through the front of the unit by unscrewing the two screws holding the pilot bracket in place. After adjusting, reassemble in reverse order.

(D) If the pilot light does not light or does not remain alight, turn the control knob to **'OFF'** position, wait five minutes and repeat steps **A** to **C**.

NOTE

If the pilot flame is smaller than the parameters described in part **(C)**, examine the pilot gas line (6mm stainless steel flexible tube) for any possible blockages/crimps in the line. To gain access to gas control components, remove control knobs and undo screws located on either underside of the control panel. Once examined, place the control panel back onto the unit and fix with the same screws.

(E) Once the pilot is established, turn the control knob anti-clockwise to the **'HIGH'** position. Examine flame.

Should the adjustment of the primary air intake into the burner be necessary, carefully lift off the grill plate and internal heat reflector to have access to the burner.

NOTE

300mm Grill Plate can be removed by a single patron. 600mm-1200mm MUST have at minimum 2 patrons to assist lifting the plate.

The aeration shutter for NG will have an opening of 2mm-3mm and LPG will have an opening of 5mm-7mm. The burner will always be factory set for the given gas type as it leaves the factory.

(F) Turn control knob anti-clockwise to the **'LOW'** position. Examine flame.

(G) Turn control knob clockwise to the **'OFF'** position.

Repeat steps **A** to **G** for all burners.

Target Top Series (TT)

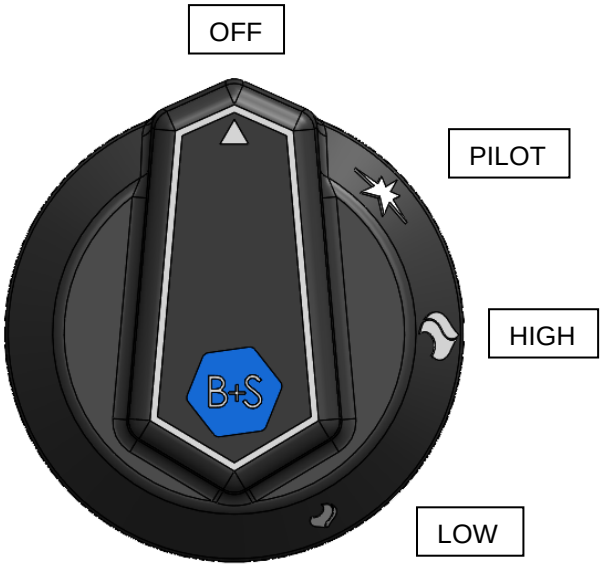

Figure 14: B&S Control Knob for Target Top

(A) Ensure gas control is in the **'OFF'** position.

(B) Depress the operating knob of the relevant burner and turn anti-clockwise to the **'PILOT'** position. Whilst keeping the knob pressed in, press the piezo ignition three to four times to ignite the pilot. Hold this position for approximately 20 seconds or until the pilot remains alight when you release the operating knob.

Should the piezo electrode not spark, ensure that the lead connected to the rear of the piezo is firmly fitted and inspect the lead throughout the appliance to the pilot to ensure that it is not earthing, or the ceramic of the electrode is cracked from overtightening.

(C) Once a pilot light is established, the pilot flame should be between 10-20mm in size and be in direct contact with thermocouple.

Should the thermocouple require adjustment, carefully lift off the central plate of the Target Top with the removal tool provided then both side plates. Once the plates are removed, remove the insulation bricks and the two hex screws holding the burner in place and then you will have internal access of the pilot assembly. After adjusting, reassemble in reverse order.

(D) If the pilot light does not light or does not remain alight, turn the control knob to **'OFF'** position, wait five minutes and repeat steps **A** to **C**.

NOTE

THE CENTRAL PLATE MUST BE ON THE UNIT FOR IGNITION OF THE BURNER AT ALL TIMES

If the pilot flame is smaller than the parameters described in part **(C)**, examine the pilot gas line (6mm stainless steel flexible tube) for any possible blockages/crimps in the line. To gain access to gas control components, remove control knobs and undo screws located on either underside of the control panel. Once examined, place the control panel back onto the unit and fix with the same screws.

(E) Once the pilot is established, turn the control knob anti-clockwise to the **'HIGH'** position. Examine flame.

(F) Turn control knob anti-clockwise to the **'LOW'** position. Examine flame.

(G) Turn control knob clockwise to the **'OFF'** position

Oven Series (OV)

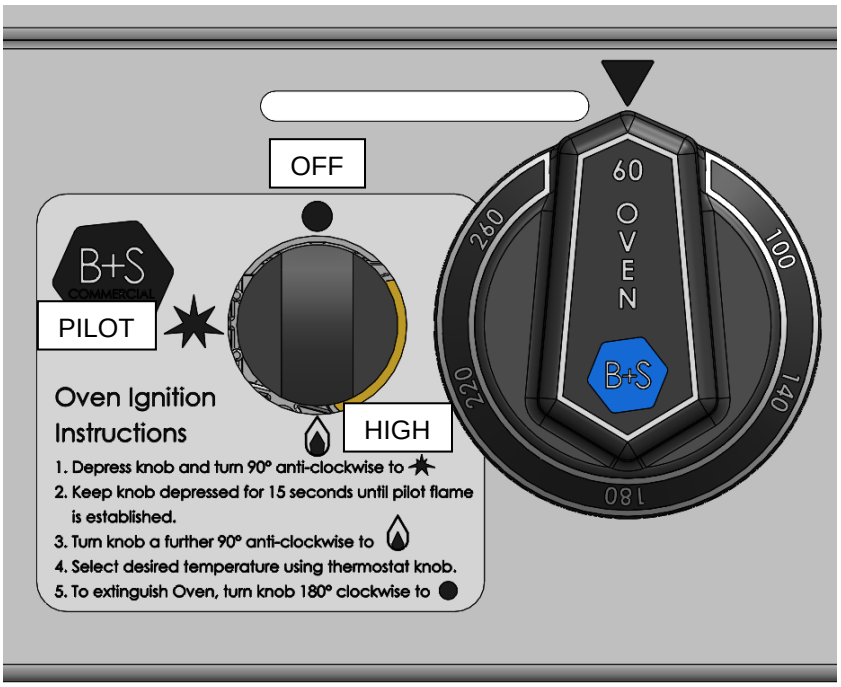

Figure 15: B&S Control Knob & Valve for Oven Series

(A) Ensure gas control is in the **'OFF'** position.

(B) Depress and hold the operating knob of the oven burner to allow the gas to flow through the system and then turn anti-clockwise to the **'PILOT'** position. Whilst keeping the knob pressed in, you will hear a 'click' which is the sparking of the electrode on the pilot. Once the pilot is ignited, hold this position for approximately 20 seconds or until the pilot remains alight when you release the operating knob.

(C) Once the pilot is established, turn the control knob anti-clockwise to the **'HIGH'** position and set the desired temperature. Examine flame.

(D) Turn control knob clockwise to the **'OFF'** position.

NOTE

In the event the appliance fails to operate correctly, check the following:

1. Data label to ensure correct gas type and pressure is set (adjust if necessary)
2. Adjust aeration on the burners by the steps listed above.
3. Injector sizes – Check against data label and the installation manual provided.
4. View pilot size and adjust if required.

If the appliance fails to operate correctly after all checks have been carried out, please contact B+S:

B+S Commercial Kitchens Pty Ltd
57 Plateau Road Reservoir VIC 3073 AUSTRALIA
Tel: +61 3 9469 4754 **Fax:** +61 3 94694504 **Web:** www.bscommercialkitchens.com

Operating Instructions

Warning – Prior to Operation

- The appliance is for professional use and is to be used by qualified professionals only.
- **ONLY** authorised service technicians are to carry out installation, servicing, or gas conversion operations.
- **DO NOT** spray aerosols in the vicinity of this appliance while it is in operation.
- **DO NOT** store or use flammable liquids or items in the vicinity of this appliance.
- In the event that you smell gas: **DO NOT** light any appliance. **DO NOT** touch/operate any electrical switch or phone in your building. Call the local gas supplier **immediately** and follow their instructions.

When using the Boiling Top, placing aluminium foil around the burner section is strictly prohibited. When used on gas stoves, it can block the air flow that is essential for optimal combustion, interfere with heating patterns and lead to gas buildup and potential explosions. Failure to do so will **VOID WARRANTY**.

When using the Oven, placing aluminium foil on or around the base plates is strictly prohibited. When used internally, it can block the air flow that is essential for optimal combustion, interfere with heating patterns and lead to gas buildup and potential explosions. Failure to do so will **VOID WARRANTY**.

When using the Griddle Hot Plate for the first time, please ensure that the plate is cleaned using warm soapy water to ensure all protective oils applied during the manufacturing process are removed from the surface to prevent any food contamination. Repeat if necessary.

When using the Char Broiler or Char Grill for the first time, please ensure that the grates provided are cleaned using warm soapy water to ensure all protective oils applied during the manufacturing process are removed from the surface to prevent any food contamination. Repeat if necessary.

When using the Target Top for the first time, please ensure that the plate provided is cleaned using warm soapy water to ensure all protective oils applied during the manufacturing process are removed from the surface to prevent any food contamination. Repeat if necessary. **DO NOT** use water on the Target Top plate surface when in operation as the plate may experience thermal shock. Allow the Target Top to cool down before cleaning.

Understand your Appliance

1. Boiling Top
2. Griddle Hot Plate
3. Char Broiler
   (Char Grill is not available on Oven)
4. Oven
5. Target Top

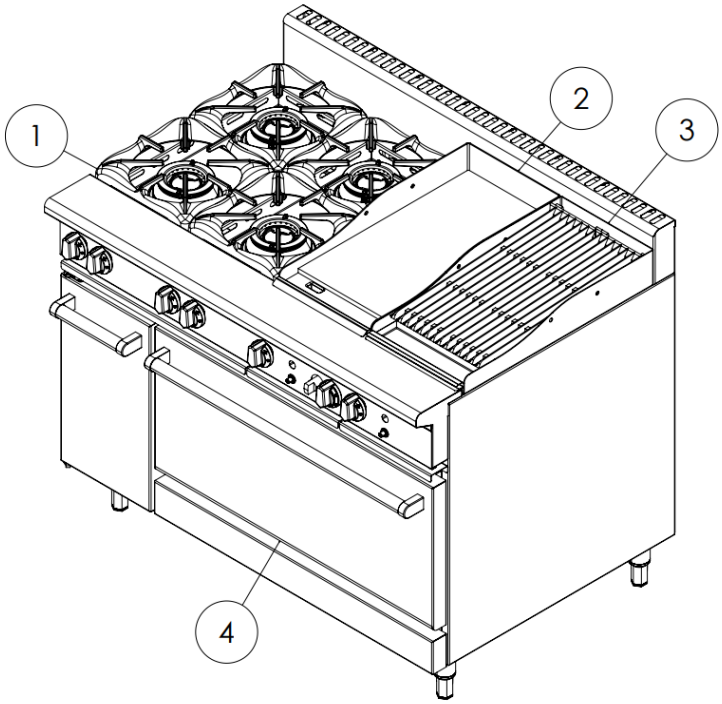

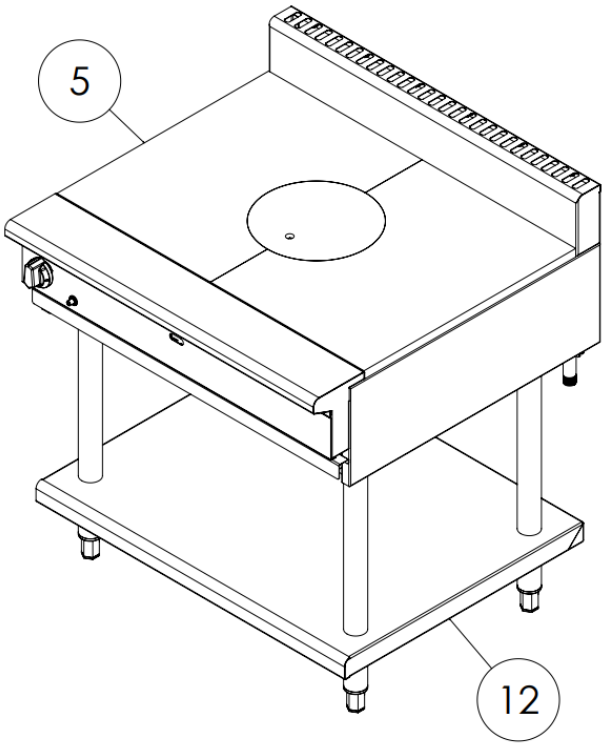

1. Hob
2. Control Panel
3. Spillage Tray
4. Splashback
5. External Side Panel
6. Storage Cabinet Door
7. Oven Burner Cover Door
8. Oven Door
9. Handle
10. Handle Shank
11. Leg
12. Undershelf

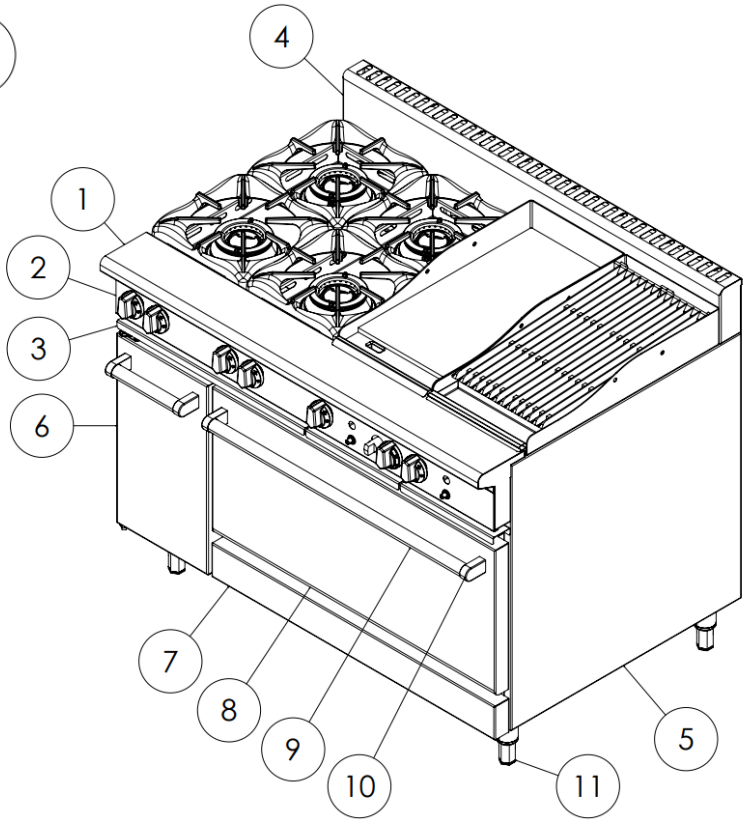

Boiling Top Lighting Instructions

Boiling Top WITH Pilot and/or Flame Failure Fitted

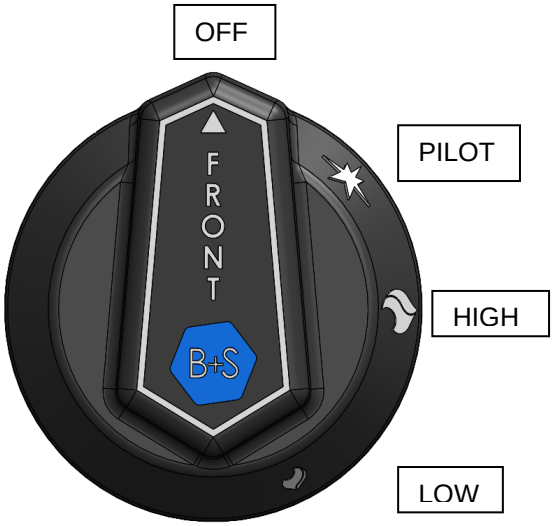

Figure 16: B&S Control Knob with Pilot

1. Ensure gas control is in the **'OFF'** position.
2. Depress the operating knob of the relevant burner and turn anti-clockwise to the **'PILOT'** position and light the pilot manually (Ignite the rear burners first to reduce risk of injury). Hold this position for approximately 20 seconds or until the pilot remains alight when you release the operating knob.
3. Once the pilot is established, turn the control knob anti-clockwise to the **'HIGH'** position.
4. To adjust the size of the flame, turn the control knob anti-clockwise to the **'LOW'** position.
5. Once operation of the unit has completed, turn the control knob clockwise to the **'OFF'** position.

Boiling Top WITHOUT Pilot and/or Flame Failure Fitted

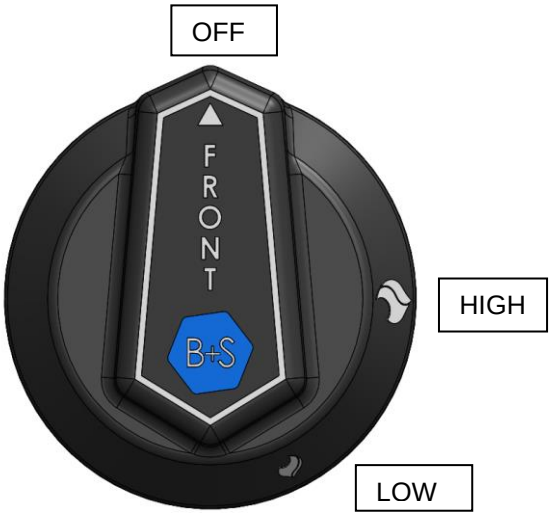

Figure 17: B&S Control Knob without Pilot

1. Ensure gas control is in the **'OFF'** position.
2. Depress the operating knob of the relevant burner and turn anti-clockwise 180º to the **'LOW'** position and light the burner manually (Ignite the rear burners first to reduce risk of injury).
3. To adjust the size of the flame, turn the control knob clockwise to the **'HIGH'** position.
4. Once operation of the unit has completed, turn the control knob clockwise to the **'OFF'** position.

Boiling Top WITHOUT Pilot but WITH Flame Failure Fitted

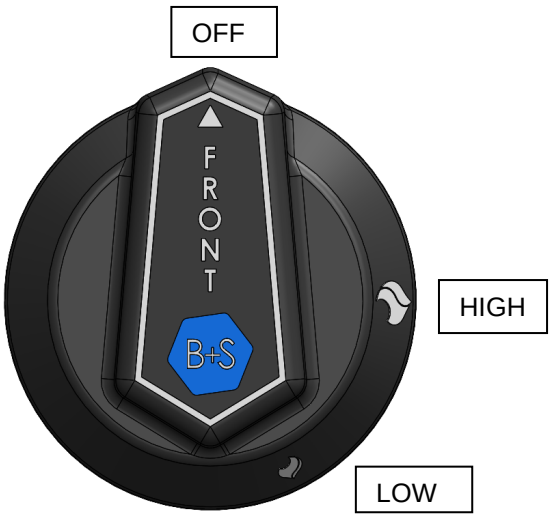

Figure 18: B&S Control Knob without Pilot

1. Ensure gas control is in the **'OFF'** position.
2. Depress the operating knob of the relevant burner and turn anti-clockwise 180º to the **'LOW'** position and light the burner manually (Ignite the rear burners first to reduce risk of injury). Hold this position for approximately 20 seconds or until the burner remains alight when you release the operating knob. Ensure the burner flame is in direct contact with the thermocouple.
3. To adjust the size of the flame, turn the control knob clockwise to the **'HIGH'** position.
4. Once operation of the unit has completed, turn the control knob clockwise to the **'OFF'** position.

Boiling Top Shutdown Procedures

Boiling Top WITH Pilot and/or Flame Failure Fitted

1. To turn the burner and pilot off, turn the control knob clockwise to the **'OFF'** position.
2. To turn **ONLY** the burner off, turn the control knob to the **'PILOT'** position.

Boiling Top WITHOUT Pilot and/or Flame Failure Fitted

1. To turn the burner off, turn the control knob clockwise to the **'OFF'** position.

Boiling Top WITHOUT Pilot but WITH Flame Failure Fitted

1. To turn the burner off, turn the control knob clockwise to the **'OFF'** position.

Char Broiler/Char Grill/Griddle Hot Plate Lighting Instructions

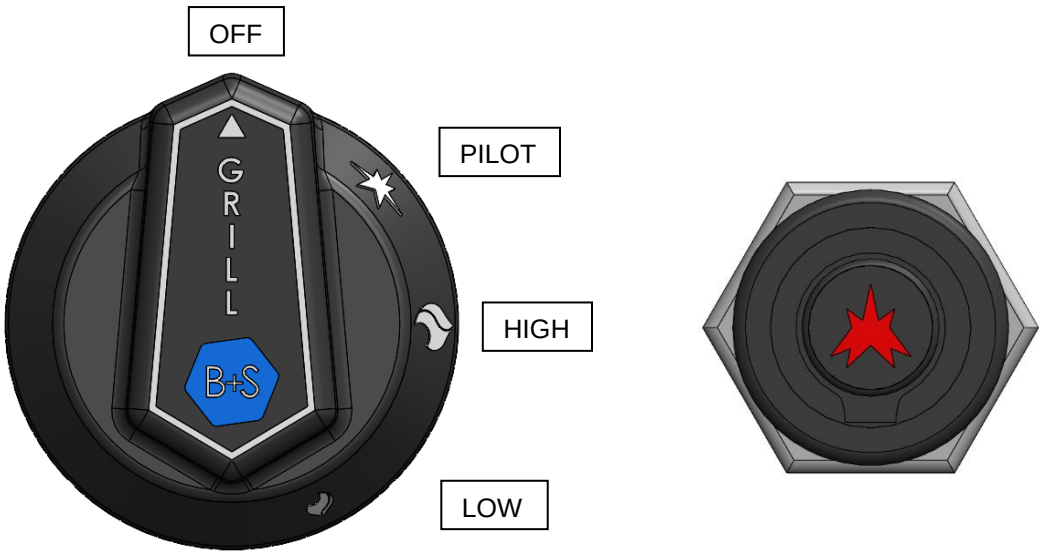

Figure 19: B&S Control Knob & Piezo for Char Broiler/Char Grill/Griddle Hot Plate

1. Ensure gas control is in the **'OFF'** position.
2. Depress the operating knob of the relevant burner and turn anti-clockwise to the **'PILOT'** position. Whilst keeping the knob pressed in, press the piezo ignition three to four times to ignite the pilot. Hold this position for approximately 20 seconds or until the pilot remains alight when you release the operating knob.
3. Once the pilot is established, turn the control knob anti-clockwise to the **'HIGH'** position.
4. To adjust the size of the flame, turn the control knob anti-clockwise to the **'LOW'** position.
5. Once operation of the unit has completed, turn the control knob clockwise to the **'OFF'** position.

NOTE

In the event that the pilot or burner is not lighting correctly with the piezo and the unit is still under warranty, please contact B+S as soon as possible to resolve the issue.

Char Broiler/Char Grill/Griddle Hot Plate Shutdown Procedures

1. To turn the burner and pilot off, turn the control knob clockwise to the **'OFF'** position.
2. To turn **ONLY** the burner off, turn the control knob to the **'PILOT'** position.

Target Top Lighting Instructions

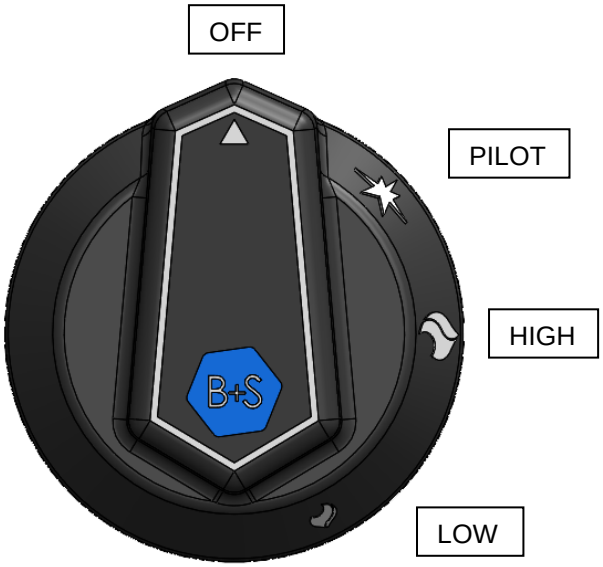

Figure 20: B&S Control Knob for Target Top

NOTE

THE CENTRAL PLATE MUST BE ON THE UNIT FOR IGNITION OF THE BURNER AT ALL TIMES

1. Ensure gas control is in the **'OFF'** position.
2. Depress the operating knob of the relevant burner and turn anti-clockwise to the **'PILOT'** position. Whilst keeping the knob pressed in, press the piezo ignition three to four times to ignite the pilot. Hold this position for approximately 20 seconds or until the pilot remains alight when you release the operating knob.
3. Once the pilot is established, turn the control knob anti-clockwise to the **'HIGH'** position.
4. To adjust the size of the flame, turn the control knob anti-clockwise to the **'LOW'** position.
5. Once operation of the unit has completed, turn the control knob clockwise to the **'OFF'** position.

NOTE

In the event that the pilot or burner is not lighting correctly with the piezo and the unit is still under warranty, please contact B+S as soon as possible to resolve the issue.

Target Top Shutdown Procedures

1. To turn the burner and pilot off, turn the control knob clockwise to the **'OFF'** position.
2. To turn **ONLY** the burner off, turn the control knob to the **'PILOT'** position.

Oven Lighting Instructions

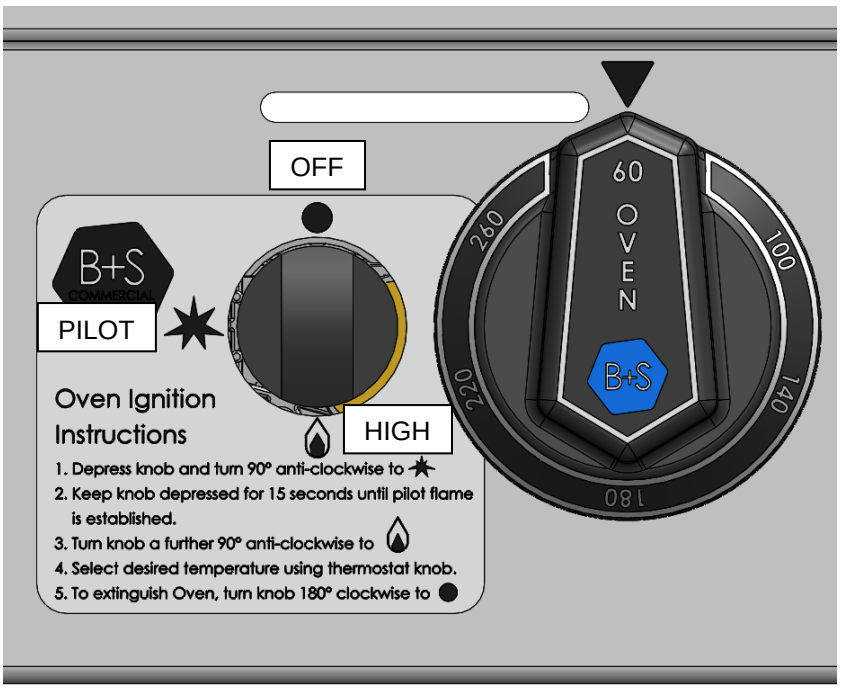

Figure 21: B&S Control Knob & Valve for Oven Series

1. Ensure gas control is in the **'OFF'** position.
2. Depress and hold the operating knob of the oven burner to allow the gas to flow through the system and then turn anti-clockwise to the **'PILOT'** position. Whilst keeping the knob pressed in, you will hear a 'click' which is the sparking of the electrode on the pilot. Once the pilot is ignited, hold this position for approximately 20 seconds or until the pilot remains alight when you release the operating knob.
3. Once the pilot is established, turn the control knob anti-clockwise to the **'HIGH'** position and set the desired temperature.

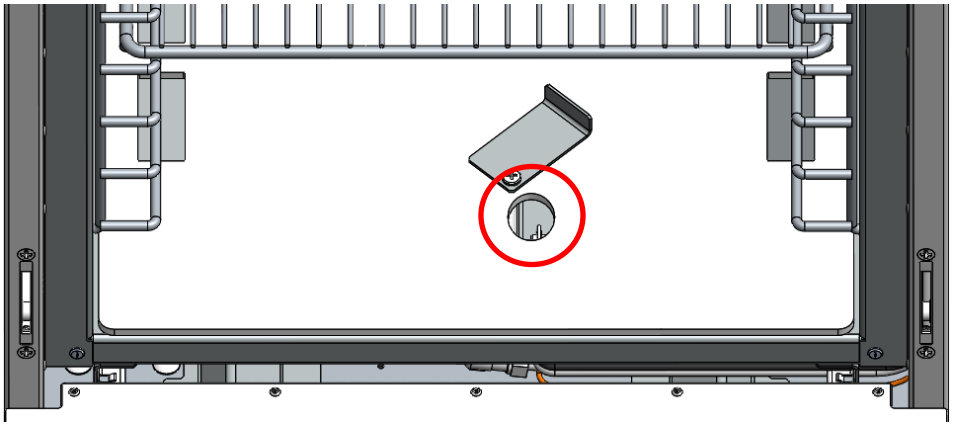

Figure 22: Pilot View Hole for Oven

NOTE

In the event that the pilot or burner is not lighting correctly with the valve and the unit is still under warranty, please contact B+S as soon as possible to resolve the issue.

Oven Shutdown Procedures

1. To turn the burner and pilot off, turn the control knob clockwise to the **'OFF'** position.
2. To turn **ONLY** the burner off, turn the control knob to the **'PILOT'** position.

Maintenance and Care

To ensure longevity, continued performance and efficiency of your appliance, a good cleaning and maintenance program is paramount.

DO NOT use the following items to clean your unit unless specified:

- Abrasive detergents, cleansers or powders
- Abrasive materials such as wire brushes or steel wool
- Caustic detergents

Daily & Fortnightly Checks & Service

Always ensure that the appliance is **OFF** before cleaning the appliance. If the appliance was recently in operation, please allow it to cool before commencing cleaning.

If the appliance is being used heavily every week, we recommend that cleaning procedures occur more often.

Boiling Top

1. Inspect for any foreign materials in the burner and spillage bowl area, leaks in the burner caps, damaged external panels and control knobs to ensure that the appliance is safe for operation.
2. Inspect burner ports and ensure that the pilot ports and thermocouple is clear of any fats, oils or food particles. Failure to do so can result in blockages, interruptions to lighting procedures and ultimately breakdown of the unit.
3. Remove each cast iron trivet, burner cap and burner body off from the cooktop taking care not to damage the pilot or thermocouple if fitted. With a clean, damp cloth soaked with mild detergent, or a soft bristle brush, remove any food particles, oils, dust and any other materials left on the surface.
4. Thoroughly clean the exterior surfaces of the appliance with a clean, damp cloth soaked with mild detergent to remove any food particles, oils, dust and any other materials left on the surface.
5. The spillage tray located under the main body of the appliance should be removed and cleaned frequently. Any carbonized food particles and oils should be removed using a clean, damp cloth soaked in a mild detergent.

Char Broiler/Char Grill

1. Inspect for any foreign materials that may be left on the cast iron grates, radiant hoods (CBR), volcanic rock holders (CGR), aluminised burners (CBR) and cast iron burners (CGR).
2. Inspect burner ports and ensure that the pilot ports and thermocouple is clear of any fats, oils or food particles. Failure to do so can result in blockages, interruptions to lighting procedures and ultimately breakdown of the unit.
3. Cast iron grill grates, radiant hoods and volcanic rock holders should always be cleaned to avoid the tainting of food. Scrape towards the front waste tray provided between each batch of food being cooked particularly when foods are dissimilar.
4. Clean grates thoroughly with a wire brush or a scraper tool to remove stubborn carbon and food deposits. Clean with hot water and a mild detergent and ensure to dry all components with a dry cloth. Turn the char broiler or grill **'ON'** to ensure grates become dry. Spread a thin film of cooking oil over the cast iron grill grates to form a protective film prior to use.
5. Thoroughly clean the exterior surfaces of the appliance with a clean, damp cloth soaked with mild detergent to remove any food particles, oils, dust and any other materials left on the surface.
6. The spillage tray located under the main body of the appliance should be removed and cleaned frequently. Any carbonized food particles and oils should be removed using a clean, damp cloth soaked in a mild detergent.

Griddle Hot Plate

1. Inspect for any foreign materials left on the griddle cooking surface area, blockages in the waste pipe, leaks in the burner, damaged external panels and control knobs to ensure that the appliance is safe for operation.
2. Visually inspect the burners, pilot and thermocouple and ensure that operation is successful. Any interruptions to lighting procedures and burner performance ultimately will lead to a breakdown of the unit.
3. Clean griddle surface with hot water, mild detergent and a scrubbing brush or scraper. To prevent rust forming on the griddle plate, ensure **ALL** detergents and cleaning materials used have been entirely removed after each cleaning process. Spread a thin film of cooking oil over the griddle cooking surface to form a protective film prior to use.
4. Thoroughly clean the exterior surfaces of the appliance with a clean, damp cloth soaked with mild detergent to remove any food particles, oils, dust and any other materials left on the surface.
5. The spillage tray located under the main body of the appliance should be removed and cleaned frequently to prevent over spills. Any carbonized food particles and oils should be removed using a clean, damp cloth soaked in a mild detergent.
6. DO NOT REMOVE THE GRIDDLE HOT PLATE FOR ANY CLEANING PROCEDURES.

Target Top

1. Inspect for any foreign materials left on the Target Top cooking surface area, damaged external panels and control knobs to ensure that the appliance is safe for operation.
2. Visually inspect the burner, insulated fire bricks, pilot and thermocouple and ensure that operation is successful. Any interruptions to lighting procedures and burner performance ultimately will lead to a breakdown of the unit.
3. **MUST** allow the Target Top unit to cool down prior to cleaning. To clean the Target Top surface, use hot water, mild detergent and a soft bristle scrubbing brush. To prevent rust forming on the Target Top plate, ensure **ALL** detergents and cleaning materials used have been entirely removed after each cleaning process.
4. Thoroughly clean the exterior surfaces of the appliance with a clean, damp cloth soaked with mild detergent to remove any food particles, oils, dust and any other materials left on the surface.
5. The spillage tray located under the main body of the appliance should be removed and cleaned frequently. Any carbonized food particles and oils should be removed using a clean, damp cloth soaked in a mild detergent.

Oven Series

1. Inspect oven base plates and wire racks for any foreign materials that may block the burner openings. Failure to do so will impact the overall performance of the appliance.
2. If possible, inspect for any foreign materials in and around the burner and pilot, damaged internal panels and control knobs to ensure that the appliance is safe for operation.
3. Clean the oven regularly with a good quality domestic cleaner.

Yearly Checks & Service

All appliances should be inspected and serviced periodically by a qualified service technician as part of any kitchen maintenance program. Do not wait until a problem occurs, any interruptions to lighting procedures and burner performance ultimately will lead to a breakdown of the unit.

Depending on the usage of the appliance, B+S recommends that this appliance is annually inspected by an authorized technician as follows:

1. Visually inspect the entire appliance and note the areas that may need attention or are of concern.
2. Inspect for any foreign materials and buildup of food particles, oils and dust that may be located at the burner, pilot or thermocouple vicinity.
3. Inspect all gas componentry for leaks and ensure all connections are tightened. Ensure gas pressure is in accordance with that specified on the data label.
4. Ensure the appliance is operating according to the manufacturer's operating manual.

If the appliance fails to operate correctly after all checks have been carried out, please contact B+S:

B+S Commercial Kitchens Pty Ltd
57 Plateau Road Reservoir VIC 3073 AUSTRALIA
Tel: +61 3 9469 4754 **Fax:** +61 3 94694504 **Web:** www.bscommercialkitchens.com

Servicing Instructions

Warning – Servicing

- The appliance is for professional use and is to be used by qualified professionals only.
- **ONLY** authorised service technicians are to carry out installation, servicing, or gas conversion operations.
- Before commencing any disassembly/assembly of gas controls, please ensure the gas supply is isolated.
- **DO NOT** spray aerosols in the vicinity of this appliance while it is in operation.
- **DO NOT** store or use flammable liquids or items in the vicinity of this appliance.
- In the event that you smell gas: **DO NOT** light any appliance. **DO NOT** touch/operate any electrical switch or phone in your building. Call the local gas supplier **immediately** and follow their instructions.

FAILURE TO DO SO WILL VOID THE B&S WARRANTY AND MAY RESULT IN DAMAGE TO EQUIPMENT OR INJURY TO PERSONNEL.

Abnormal Operation

Any of the following instances are to be considered abnormal operation and may require servicing.

- Incomplete ignition of burner on the startup procedure
- Pilot unable to remain lit on startup or during operation.
- Unable to correctly light all burner ports
- Yellow tipping of the burner flame.
- Burner failing to stay lit.
- Ensure airflow to the burner is sufficient by adjusting the aeration shutter if present.
- Gas valves are clunky and hard to rotate.
- Safety devices are not operating correctly.
- Overpowering smell of gas.
- Blockages in all gas components.

Boiling Top Section – Gaining access to gas components

1. To gain access to the boiling top burner, simply lift off the cast iron trivets and then you can then lift off the burner cap and burner body from the venturi. If the pilot assembly is to be accessed, simply remove the stainless-steel spillage bowl and internal access to all thermocouples and flexible gas tubes will be available. Please take extreme caution when removing the cast iron trivets and burners if the appliance has been in recent operation.

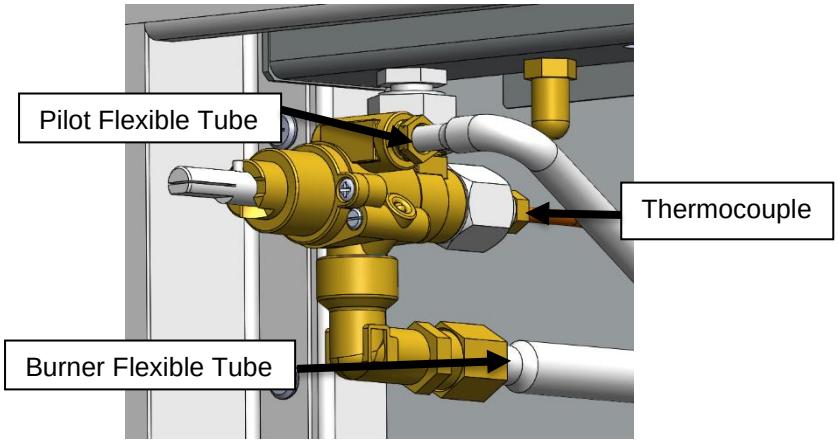

Figure 24: Gas Cock Assembly

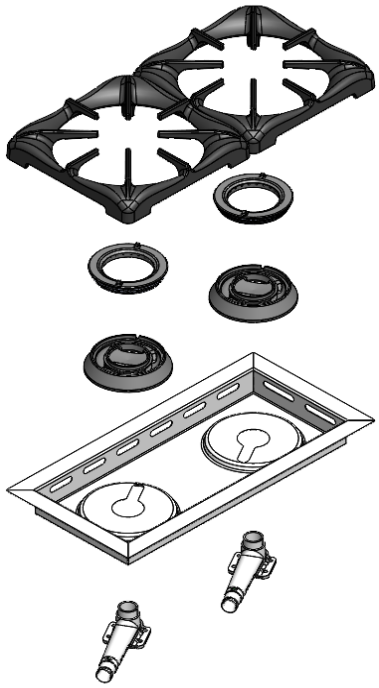

Figure 23: Boiling Top Removal

2. To replace or to service the gas cock, remove the control knob from the gas cock by pulling it off then by undoing the two screws located underneath the control panel. Access will then be available.

2.1 – If the appliance is fitted <u>WITH</u> a pilot and/or flame failure

Undo the 10mm compression nut attached to the pilot flexible tubing located on the RHS of the gas cock.
Undo the nut attached to the burner flexible tubing located at the rear of the gas cock with a spanner.
Undo the 9mm nut attached to the thermocouple located at the rear of the gas cock.
Undo the nut attached to the spigot located on the top of the gas cock with a spanner.
Gas cock will be free from the manifold and all connections.

2.2 – If the appliance is <u>NOT</u> fitted with a pilot but only flame failure.

Undo the nut attached to the burner flexible tubing located at the rear of the gas cock with a spanner.
Undo the 9mm nut attached to the thermocouple located at the rear of the gas cock.
Undo the nut attached to the spigot located on the top of the gas cock with a spanner.
Gas cock will be free from the manifold and all connections.

3. To remove **<u>ONLY</u>** the pilot from the pilot bracket you must firstly undo the 10mm nut connecting the pilot flexible tubing to the pilot assembly. Carefully remove the locking pin located around the pilot head then remove the pilot head from the assembly. Undo the 13mm pilot nut located below the pilot head you had just removed. The pilot assembly will now be free.

   If you wish to remove the pilot assembly along with the pilot flexible tube and pilot bracket as one, undo the 10mm nut attached to the pilot flexible tubing located on the RHS of the gas cock. Undo the two hex head screws holding the burner venturi into position. With the venturi free, undo the two screws connecting the pilot bracket to the burner. The complete pilot assembly will now be free.

4. The thermocouple can be removed by firstly undoing the thermocouple 9mm nut located at the rear of the gas cock. Once free, simply untighten the 10mm nut located below the tip of the thermocouple on the pilot bracket. The thermocouple will now be free.

5. Replace in reverse order.

Char Broiler – Gaining access to gas components

1. To gain access to the char broiler burner, simply lift off the cast iron j-grates and radiant hoods to have clear access internally. Unscrew both hex screws which holds the burner cross light shield and the burner to base plate at the rear of the burner. The burner will now simply slide off the injector. Please take extreme caution when removing the cast iron components if the appliance has been in recent operation.

Should the adjustment of the primary air intake into the burner be necessary whilst off, the aeration shutter for NG is roughly 7.5mm-8mm open and LPG is 15mm-16mm open. The burner will always be factory set for the given gas type as it leaves the factory.

2. To replace or to service the gas cock, remove the control knob from the gas cock by pulling it off then by undoing the two screws located underneath the control panel. Access will then be available. Disconnect the piezo igniter lead from the rear of the piezo to avoid pulling or tearing of the lead.

2.1 – The appliance is fitted <u>WITH</u> a pilot and flame failure

Undo the 10mm compression nut attached to the pilot flexible tubing located on the RHS of the gas cock.
Undo the nut attached to the burner flexible tubing located at the rear of the gas cock with a spanner.
Undo the 9mm nut attached to the thermocouple located at the rear of the gas cock.
Undo the nut attached to the spigot located on the top of the gas cock with a spanner.
Gas cock will be free from the manifold and all connections.

3. To remove the pilot assembly from the unit, firstly remove the control knob from the gas cock by pulling it off then by undoing the two screws located underneath the control panel. With clear access to the pilot assembly, simply unscrew the two screws holding the pilot assembly to the pilot bracket.

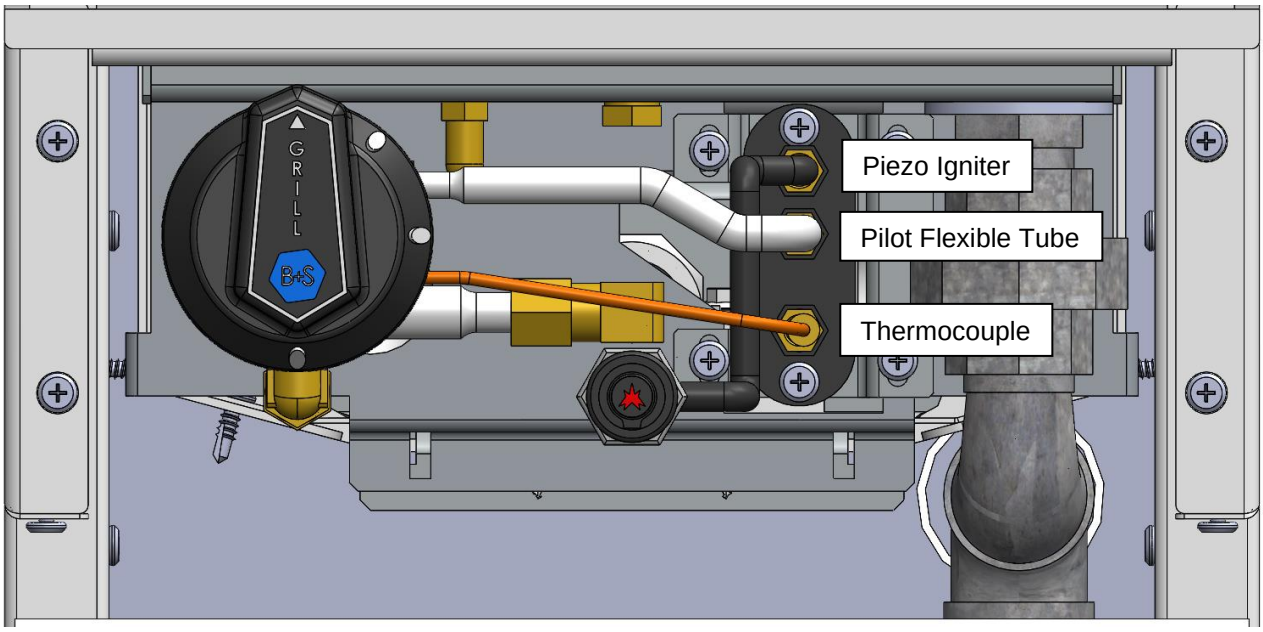

Figure 25: Char Broiler Front Access

Char Grill – Gaining access to gas components

1. To gain access to the char grill burner, simply lift off the cast iron j-grates, remove all volcanic rocks and take out the cast iron volcanic rock holder to have clear access internally. The cast iron burner will now simply slide off the injector. Please take extreme caution when removing the cast iron components if the appliance has been in recent operation.

Should the adjustment of the primary air intake into the burner be necessary, the aeration shutter for NG is roughly half open and LPG is fully open. Allow the burner at minimum 10 min to heat up and for the flame to settle. The burner will always be factory set for the given gas type as it leaves the factory.

2. To replace or to service the gas cock, remove the control knob from the gas cock by pulling it off then by undoing the two screws located underneath the control panel. Access will then be available. Disconnect the piezo igniter lead from the rear of the piezo to avoid pulling or tearing of the lead.

2.1 – The appliance is fitted <u>WITH</u> a pilot and flame failure

Undo the 10mm compression nut attached to the pilot flexible tubing located on the RHS of the gas cock.
Undo the nut attached to the burner flexible tubing located at the rear of the gas cock with a spanner.
Undo the 9mm nut attached to the thermocouple located at the rear of the gas cock.
Undo the nut attached to the spigot located on the top of the gas cock with a spanner.
Gas cock will be free from the manifold and all connections.

3. To remove the pilot assembly from the unit, firstly remove the control knob from the gas cock by pulling it off then by undoing the two screws located underneath the control panel. Lift off the cast iron j-grates, remove all volcanic rocks, take out the cast iron volcanic rock holder and the cast iron burner to have clear access internally. With the burner removed, unscrew the two screws holding the pilot assembly to the pilot shield. The pilot assembly will now be free to move to the front.

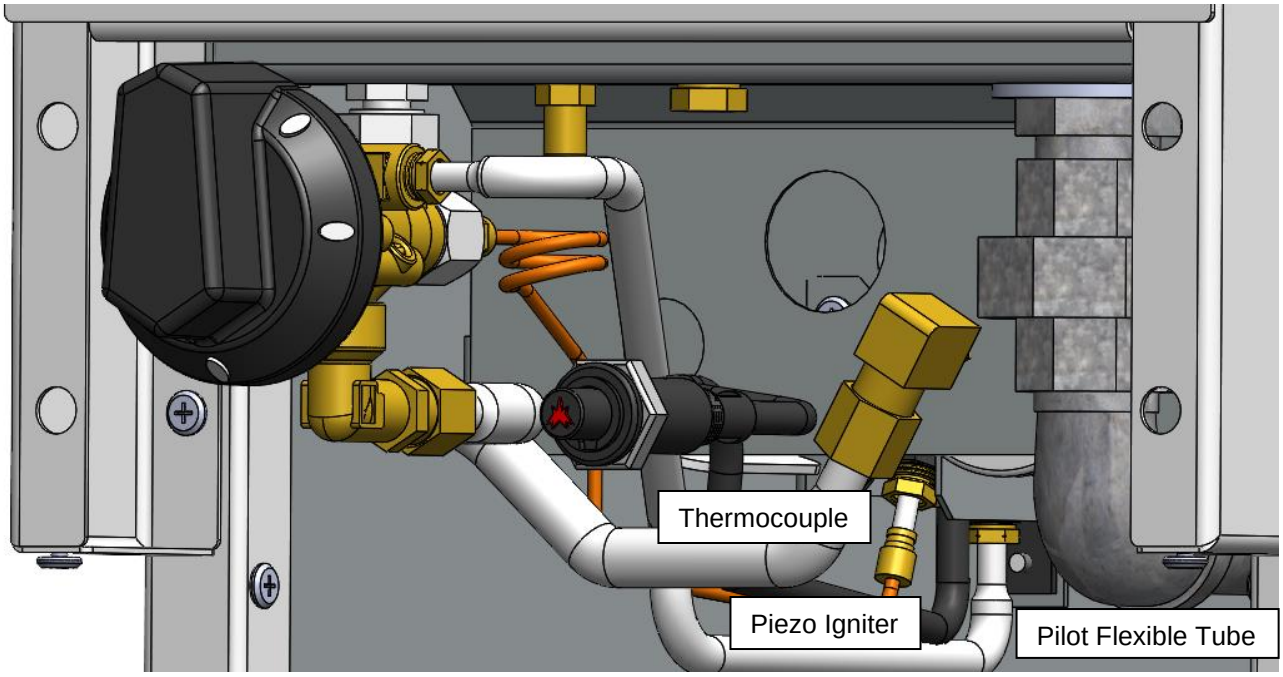

Figure 16: Char Grill Front Access

Griddle Hot Plate – Gaining access to gas components

IMPORTANT INFORMATION

300mm Grill Plate can be removed by a single patron. 600mm-1200mm MUST have at minimum 2 patrons to assist lifting the plate. Hooks are available for servicing from the manufacturer.

To gain access to the griddle hot plate burner, please ensure the important information above is read before proceeding.

1. Lift off the griddle hot plate to have complete access to all internal gas components. Once the plate has been removed, unscrew the four screws holding the heat reflector in place and remove from the unit. The burner will now be exposed and can be removed by simply unscrewing the rear screw and sliding the burner of the injector.

Should the adjustment of the primary air intake into the burner be necessary, the aeration shutter for NG will have an opening of 2mm-3mm and LPG will have an opening of 5mm-7mm. The burner will always be factory set for the given gas type as it leaves the factory.

2. To replace or to service the gas cock, remove the control knob from the gas cock by pulling it off then by undoing the two screws located underneath the control panel. Access will then be available. Disconnect the piezo igniter lead from the rear of the piezo to avoid pulling or tearing of the lead.

2.1 – The appliance is fitted WITH a pilot and flame failure

Undo the 10mm compression nut attached to the pilot flexible tubing located on the RHS of the gas cock.
Undo the nut attached to the burner flexible tubing located at the rear of the gas cock with a spanner.
Undo the 9mm nut attached to the thermocouple located at the rear of the gas cock.
Undo the nut attached to the spigot located on the top of the gas cock with a spanner.
Gas cock will be free from the manifold and all connections.

3. To remove the pilot assembly from the unit, firstly remove the control knob from the gas cock by pulling it off then by undoing the two screws located underneath the control panel. With clear access to the pilot assembly and the connections from the gas cock undone, simply unscrew the two screws holding the pilot assembly to the pilot bracket. If the griddle plate has been removed from the unit simply pull the pilot assembly out from within the unit. If the griddle hot plate has not been removed, you can angle the pilot assembly out through the front.

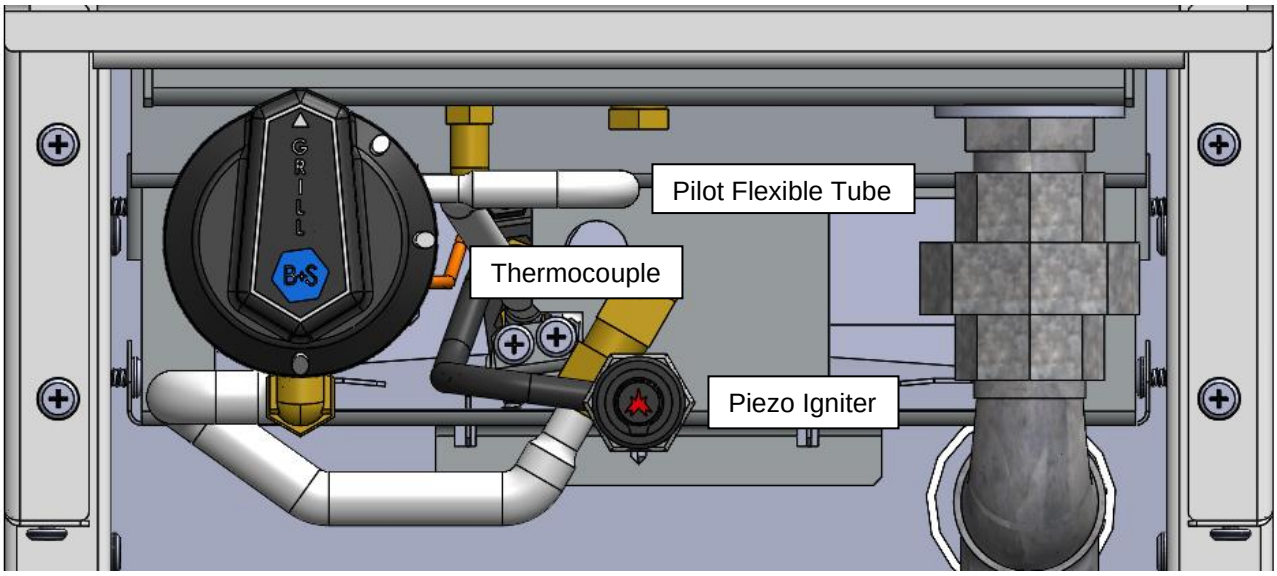

Figure 17: Griddle Hot Plate Front Access

Target Top – Gaining access to gas components

IMPORTANT INFORMATION

The Target Top sectional plates can be removed by a single patron although assistance to remove the larger side plates is recommended as they weigh approximately 25-30kg.

To gain access to the target top burner, please ensure the important information above is read before proceeding.

1. Carefully lift off the central plate of the Target Top with the removal tool provided then both side plates. Once the plates are removed, remove all insulating bricks and the two hex screws holding the burner in place. The burner will now be able to slide off the front injectors.

2. To replace or to service the gas cock, remove the control knob from the gas cock by pulling it off then by undoing the two screws located underneath the control panel. Access will then be available. Disconnect the piezo igniter lead from the rear of the piezo to avoid pulling or tearing of the lead.

2.1 – The appliance is fitted WITH a pilot and flame failure

Undo the 10mm compression nut attached to the pilot flexible tubing located on the RHS of the gas cock.
Undo the nut attached to the burner flexible tubing located at the rear of the gas cock with a spanner.
Undo the 9mm nut attached to the thermocouple located at the rear of the gas cock.
Undo the nut attached to the spigot located on the top of the gas cock with a spanner.
Gas cock will be free from the manifold and all connections.

3. To remove the pilot assembly from the unit, firstly remove the control knob from the gas cock by pulling it off then by undoing the two screws located underneath the control panel. With the connections from the gas cock undone as described above (**2.1**), carefully lift off the central plate of the target top with the removal tool provided then both side plates. Once the plates are removed, remove all insulating bricks and the two hex screws holding the burner in place. Unscrew the two hex screws holding the pilot bracket to the internal frame and the pilot assembly will be free to move.

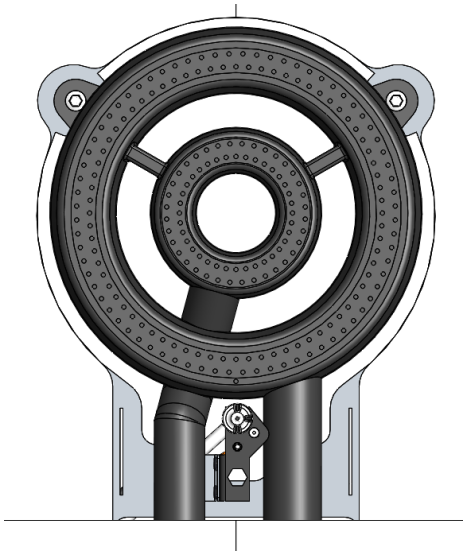

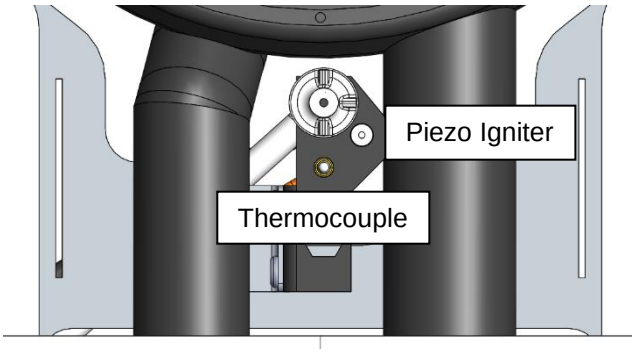

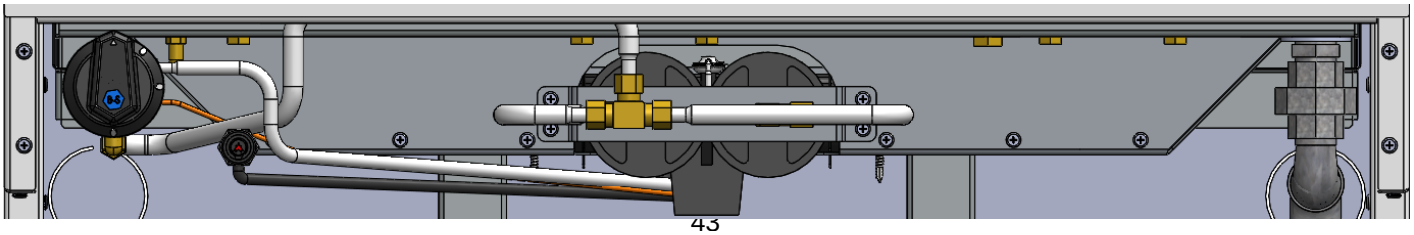

Figure 18: Target Top Internal Components

Oven Series – Gaining access to gas components

1. To gain access to the oven burner, simply open the lower oven door compartment and unscrew the four screws holding the burner in place. The burner will now slide out. When placing the burner back into position it will be ideal to have the main oven door open with the mild steel plate removed as the burner needs to be placed into its locating hole at the rear of the oven.

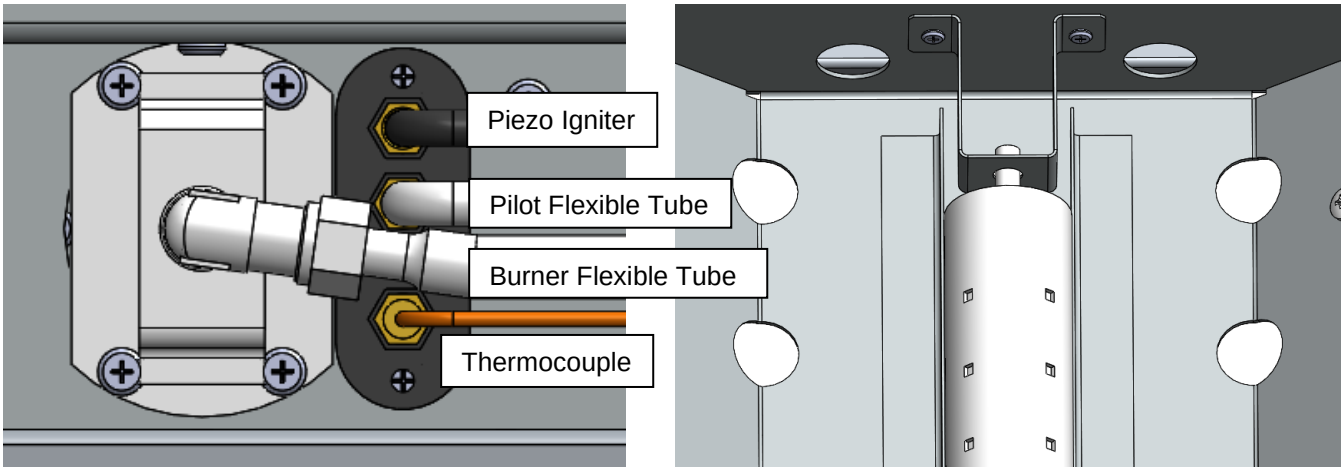

Figure 19: Oven Series Internal Components

2. To replace or to service the oven control valve, remove all control knobs from the gas cocks by pulling them off then by undoing the two screws located underneath the control panel. Access to the valve will now be available. To remove the valve from the manifold simply use a spanner to undo the union barrel connection to the manifold.

2.1 – The appliance is fitted <u>WITH</u> a pilot and flame failure

Undo the 10mm compression nut attached to the pilot flexible tubing located at the rear of the valve.
Undo the nut attached to the burner flexible tubing located on the RHS of the valve with a spanner.
Undo the 9mm nut attached to the thermocouple located at the rear of the valve.
Pull out the piezo igniter lead from the top front valve if replacement is needed.
All connections from the oven burner and pilot to the valve run down the RHS of the unit.

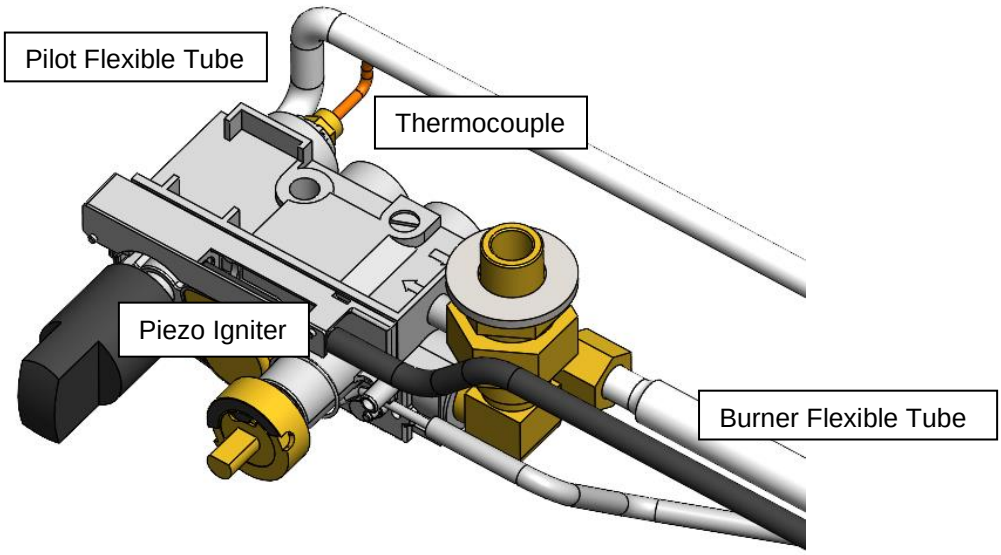

Figure 20: Oven Control Valve

Troubleshooting gas components

If the appliance fails to operate correctly after all checks have been carried out, please contact B+S directly.

FAULT	POSSIBLE CAUSE	CHECKS
Pilot light not igniting	Blockage of pilot or injector Gas line not open Gas pressure to the unit is incorrect Piezo igniter not sparking	Check that the pilot injector is not blocked as described in commissioning & servicing instructions. Check that the gas pressure supplied to the unit is as provided in the nominal input rates. Try igniting the pilot manually
Pilot light not establishing	Positioning of thermocouple is incorrect Faulty thermocouple Faulty gas cock control valve	Check the connection of the thermocouple to the gas cock control & pilot bracket is not loose. Adjust positioning of thermocouple to ensure pilot flame is hitting only the tip of the thermocouple. Low mV readings would indicate an issue. Contact manufacturer or authorised service agent
Pilot established, main burner not lighting	Faulty gas cock control valve Blocked burner injector Blocked burner ports Aeration shutter altered Incorrect gas pressure	Contact manufacturer or authorised service agent Check that the burner injector and ports are not blocked as described in commissioning & servicing instructions. Check that the aeration shutter for the burner is not altered as described in commissioning & servicing instructions Check that the gas pressure supplied to the unit is as provided in the nominal input rates.
Oven temperature incorrect	Faulty oven control valve Faulty calibration of valve Faulty temperature probe Blocked Burner injector/ports	Set desired temperature and measure internal oven temperature. Inspect that the oven probe has not been kinked or damaged. Check that the burner injector and ports are not blocked as described in commissioning & servicing instructions.

Standard Warranty Conditions

B&S Commercial Kitchens Pty Ltd of 57 Plateau Road, Reservoir, Victoria (hereinafter called 'B&S') undertakes by this warranty, that B&S or its agent will pay for the cost of labor and parts which B&S, or its agent find defective for:

K+ Range - Eighteen (18) months from date of installation/hand over for projects.
B+S Black Range – Twenty Four (24) months from date of installation/hand over for projects.
Verro Range – Thirty Six (36) months from date of installation/hand over for projects.

The liability of B&S under this warranty is limited to the repair or replacement of defective goods or components. All other costs including, without limitation, cartage, carriage and installation shall be borne by the purchaser.

IMPORTANT

Prior to requesting a service call, please be sure that the cooking equipment is being used and maintained in accordance with the instruction manual provided with your cooking equipment. Please also be sure that your cooking equipment has been installed in accordance with the manual by a qualified installer. All cooking equipment must be commissioned by the installer upon completion of installation. Failure of these procedures will result in non-warranty service costs.

Warranty labor is supplied free of charge during business hours (8 am to 4 pm AEST) Monday to Friday. Should warranty work be requested outside of our normal working hours, a labor charge will be applied equivalent to a normal hour rate, with out of hours penalty rates. Penalty rates amount must be borne by the purchaser. Claims for non-covered parts, no faults found, travel over 100km or other items outside our standard terms and conditions will be chargeable. Any extra time spent on site due to required inductions etc. is not covered by the warranty.

1. This warranty applies only for mainland Australia and Tasmania, and does not cover any service consequent upon accident, alterations, misuse, fire, flood or act of God. Warranty for New Zealand is Twelve (12) months parts and labor for K+, B+S Black & Verro Ranges.
2. This warranty is only valid if the appliance has been installed in accordance with local regulations by a duly authorised person, and the B&S installation instructions provided with the appliance. If in doubt, please contact B&S or their representative for further information. No responsibility will be accepted for defects or damages by improper installation, for changes to the product not authorised by B&S or for the operation outside the technical specifications of the appliance.
3. This warranty is conditional upon the appliance being used in normal commercial catering operations.
4. This warranty is the only express warranty given by the Company. No person has authority to change or to add to these obligations and liabilities.
5. The Company has the right to determine whether or not a fault is caused by faulty workmanship or material or that any part is defective.
6. This warranty does not apply to any loss suffered through or resulting from the non-operation or the ineffective operation of the cooking appliance or any part of the cooking appliance.
7. This warranty does not extend to goods and components thereof manufactured either entirely or substantially of glass or similar substances, light globes, infrared or quartz tubes and electrical controls or elements.
8. While the goods are in the custody of the seller for investigation or repair, they shall be at the risk of the purchaser and no liability shall attach to the Company, its servants or agents for any damage occasioned to, or loan of, the goods whatsoever.
9. All warranties are non-transferable and are only applicable to the original end user (purchaser).
10. All warranty work must be carried out by a B+S approved service technician.

The Purchaser must give notice to the Company immediately upon it becoming aware of the alleged defect and in any event before the expiration of the appropriate warranty period.

B+S will endeavor to have a service technician on site for all warranty service requests within a 24 hour period or by the end of the next business day at the latest. All warranty requests must be in

writing by either lodging a warranty request through B+S website or be emailing the following contact: clientservices@bscommercialkitchens.com

Details of the installer such as contact name, business name, telephone number and license number MUST be provided to avoid any delays.

11. Nothing in this warranty, however, shall be construed as affecting any rights you may have under the Trades Practices Act or any other Commonwealth or State Legislation which gives you rights which cannot be modified or excluded by agreement.

SPECIAL PROVISIONS – NOT COVERED BY WARRANTY

- Cleaning of spark and ignition sensors is not covered by warranty. Damage caused by fats, oils, water or food particles falling into burners or pilots **will not be covered under warranty.**
- Cleaning of burners due to blockage of burner orifices caused by fats, oils, water or food particles **is not covered by warranty.**
- Breakage of pilot knobs, knee valve handles and knee wands are not covered under warranty.
- Thermocouples, piezo leads and ignitors are only covered by Twelve (12) months parts and labor across K+, B+S Black and Verro ranges.
- Seizure of gas cocks and knobs.
- Cleaning of blocked drains.
- Damage caused by lime scale and/or corrosion.
- Parts not supplied by B+S or a B+S authorised service technician.
- Damage caused by rodents and insects.
- Scheduled general maintenance.
- Normal wear and tear of parts
- Filters for DSK Deck Steamers

Additional costs are payable for:
Accommodation, cost of transport such as flights/ferries, poor access and waiting times.