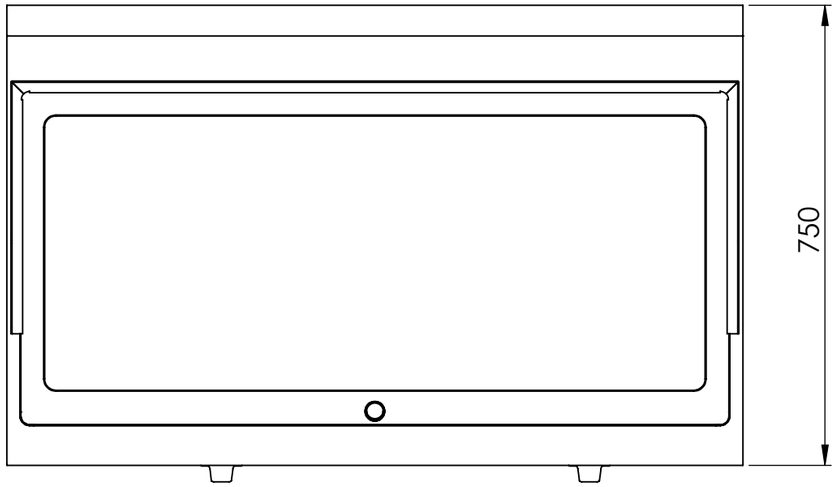

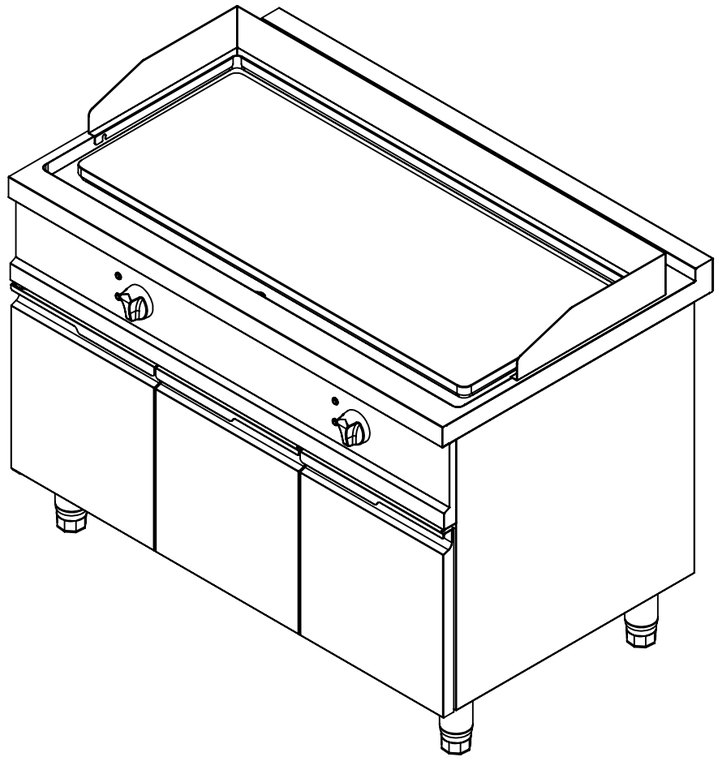

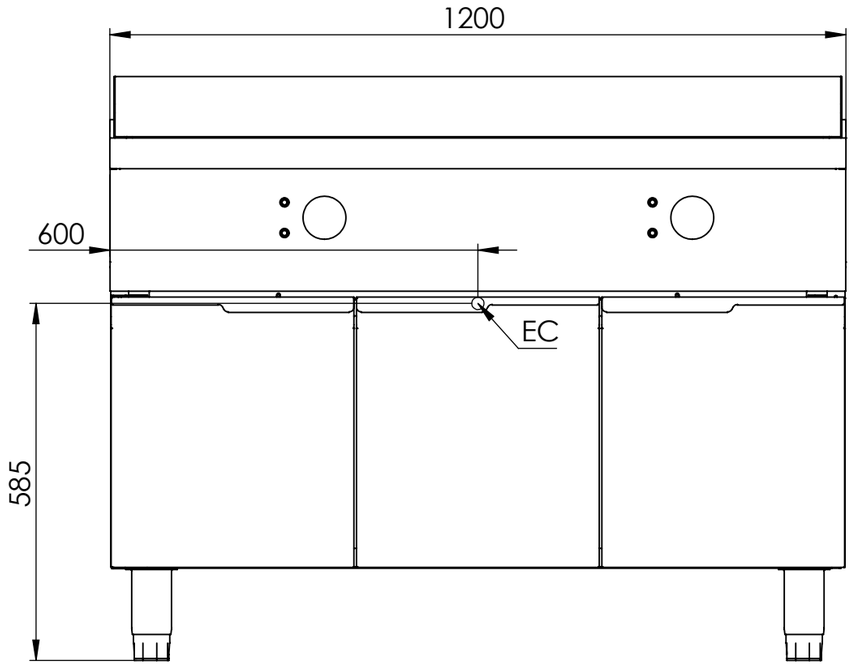

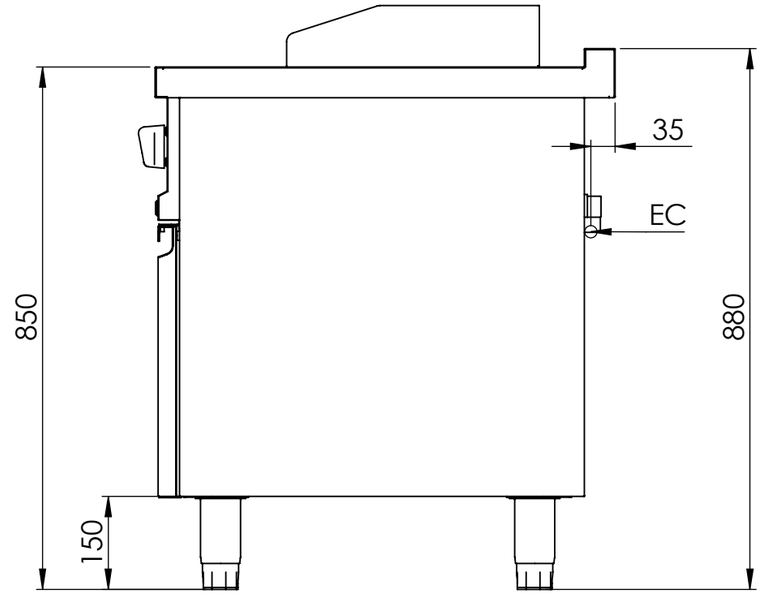

NOTE

EC = Electrical Connection: 13.5kW, 3P+E 415V, 50-60Hz, 20A

UNLESS OTHERWISE SPECIFIED:
1.DIMENSIONS ARE IN MILLIMETRES
2.TOLERANCES:
LINEAR: +/- 1mm
ANGULAR: +/- 0.30°
3.BEND RADII 2mm. ALL BENDS AT 90°

SURFACE FINISH:
1. NATURAL (LEAVE FILM INTACT FOR DELIVERY).
2. NO BLEMISHES OR SCRATCHES ON BASE METAL.
3. REMOVE ALL BURRS AND SHARP EDGES.

DO NOT SCALE DRAWING

REVISION: -

B & S Commercial Kitchens
57 Plateau Road, ReservoirVictoria, 3073
Tel.: (03) 9469 4754 / Fax: 9469 4504

	NAME	SIGNATURE	DATE
DRAWN	S.K		31/08/2025
CHK'D			
APPV'D			
MFG			
Q.A			

Thickness (mm): -

MATERIAL:

WEIGHT:

TITLE:

DLPP12N-C13D5

DWG NO.

A3

SCALE: 1:10

SHEET 1 OF 1