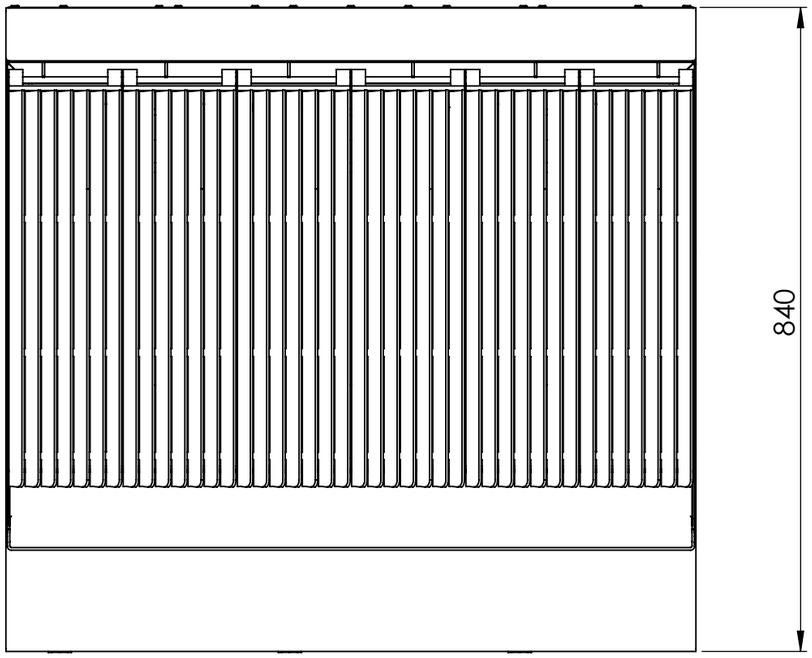

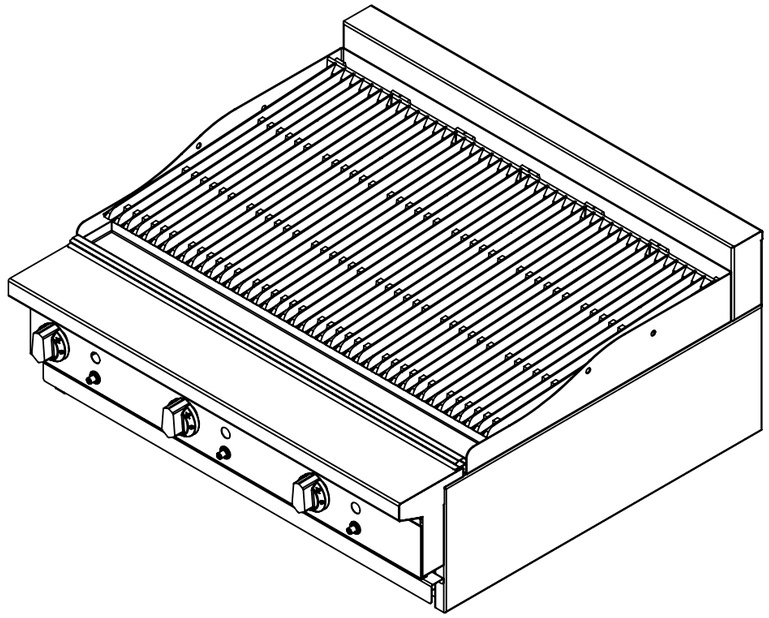

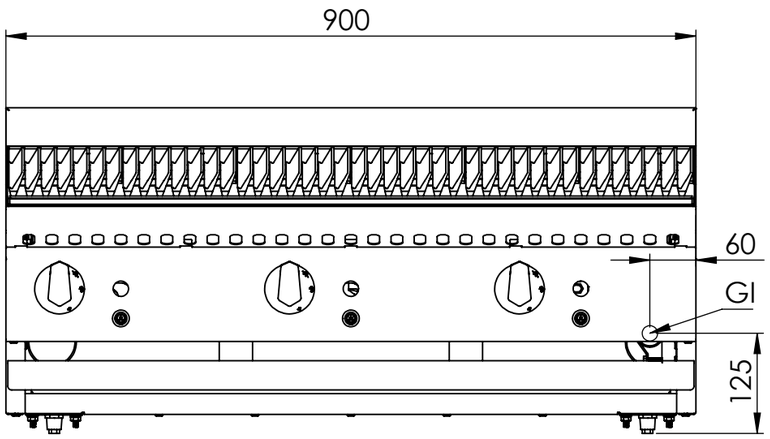

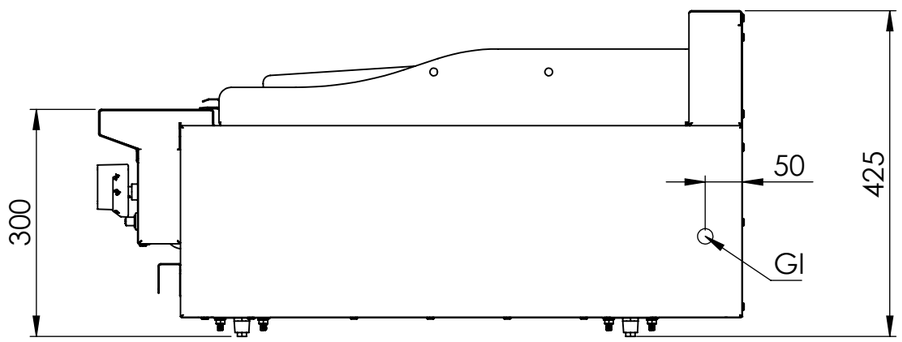

NOTE

GI = Gas Inlet 3/4" BSP Male

Gas Consumption: NG = 76.8MJ/h; LPG = 85.8MJ/h

UNLESS OTHERWISE SPECIFIED:
1.DIMENSIONS ARE IN MILLIMETRES
2.TOLERANCES:
LINEAR: +/- 1mm
ANGULAR: +/- 0.30°
3.BEND RADII 2mm. ALL BENDS AT 90°

SURFACE FINISH:
1. NATURAL (LEAVE FILM INTACT FOR DELIVERY).
2. NO BLEMISHES OR SCRATCHES ON BASE METAL.
3. REMOVE ALL BURRS AND SHARP EDGES.

	NAME	SIGNATURE	DATE
DRAWN	S.K		2/05/2023
CHK'D			
APPV'D			
MFG			
Q.A			

Thickness (mm): -

MATERIAL:

WEIGHT:

DO NOT SCALE DRAWING

REVISION: -

B & S Commercial Kitchens
57 Plateau Road, ReservoirVictoria, 3073
Tel.: (03) 9469 4754 / Fax: 9469 4504

TITLE:

KCGR-9

DWG NO.

A3

SCALE: 1:8

SHEET 1 OF 1